Aerodyne Research Inc.

AMS/ACSM Tips, Tricks & FAQ's

Bill Brooks, Phil Croteau, John Jayne,
Ed Fortner, Wade Robinson

AMS User's Meeting 2016

10/22/16

Support Email

- Please send all support related questions to
  - CACC-Support@aerodyne.com

Leak Checking Tips

Aerodyne Research Inc.

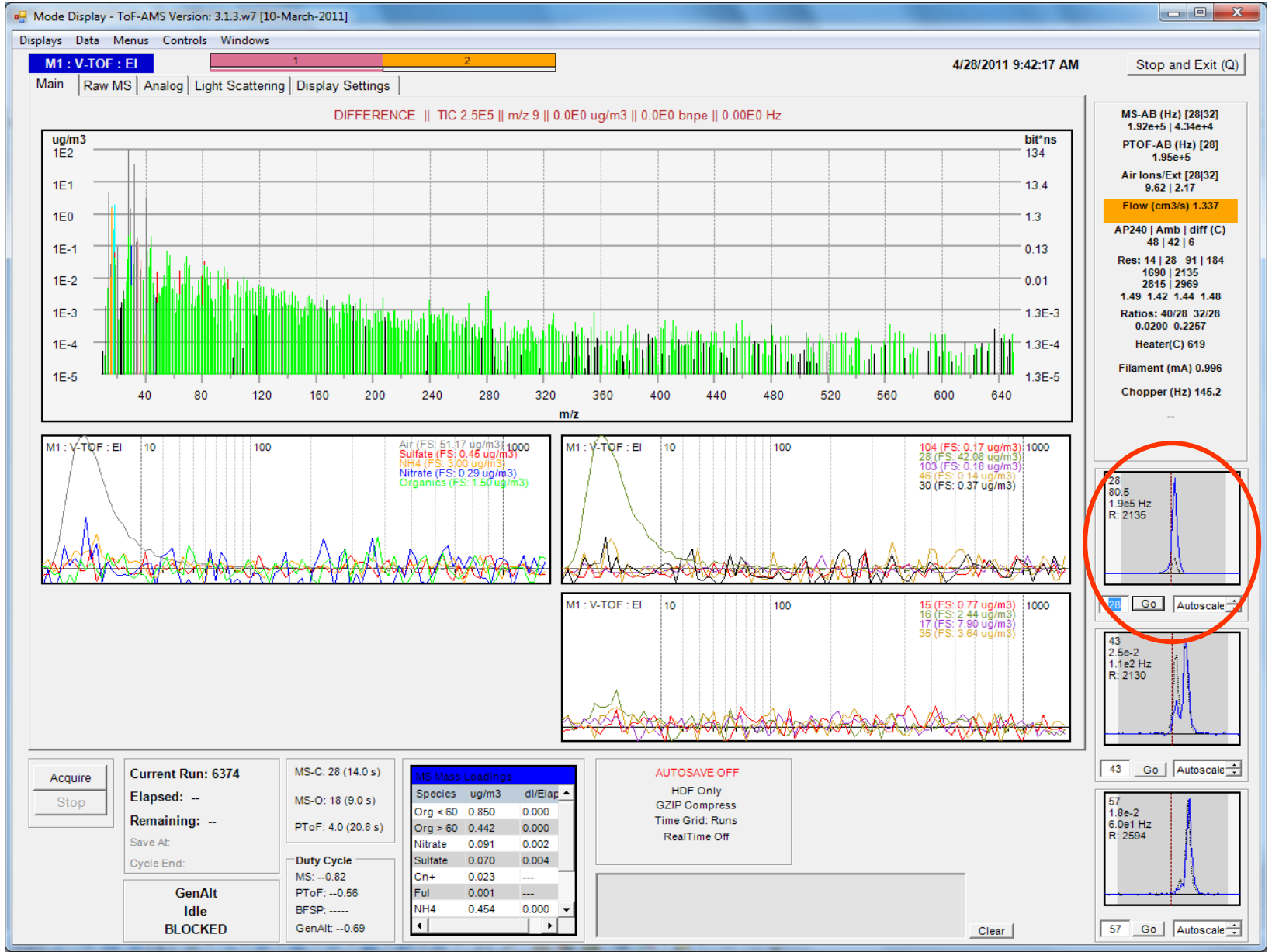

Normal

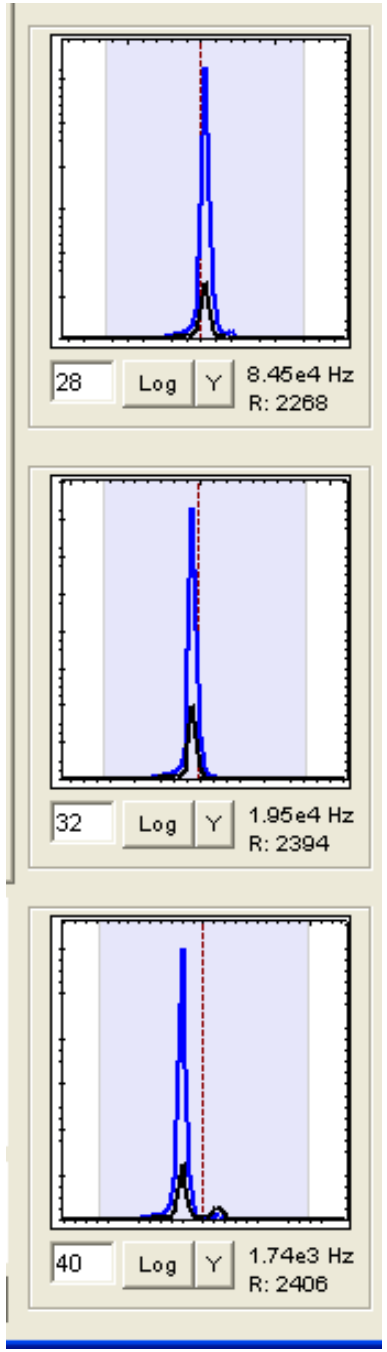

Leak

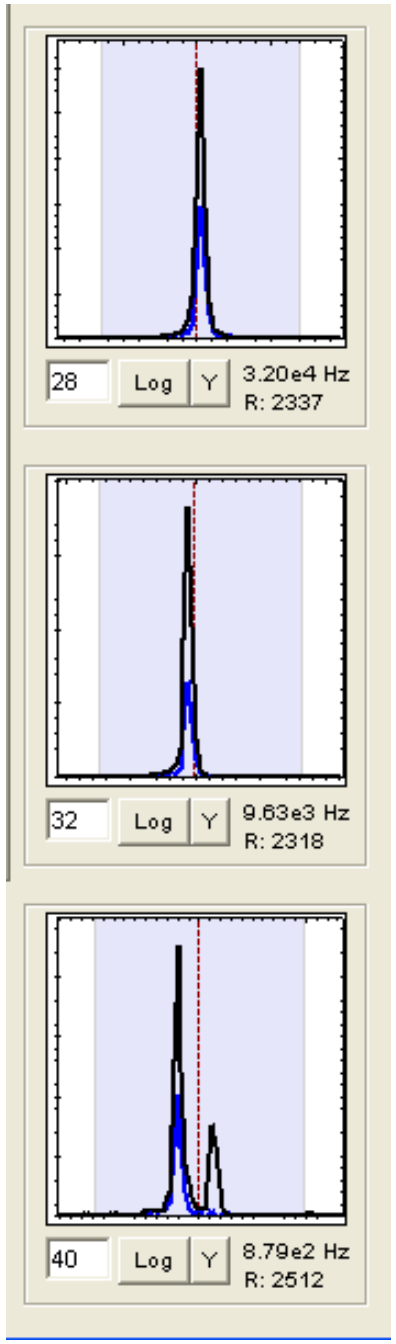

Aerodyne Research Inc.

If the Airbeam (m/z 28,32,40) has a diff/closed ratio of < 2 you probably have a leak.

Aerodyne Research Inc.

One can further get a clue as to where the leak is by *carefully* looking at your closed and difference Airbeam.

If the leak is in the PToF region, the difference Airbeam will be attenuated and the closed AB will not be changed too much from normal.

If it's in the detection region, the difference AB will be about the same as normal, but the closed air signal will have an elevated background.

Using ToF as Leak Checker

Aerodyne Research Inc.

- He or Ar are good choices.
- Using He may require a change in the timing window.
- Use controlled bursts of gas, don't "flood" system.
- Depending on where the leak is, may need to wait several seconds for a response.

This image cannot currently be displayed.

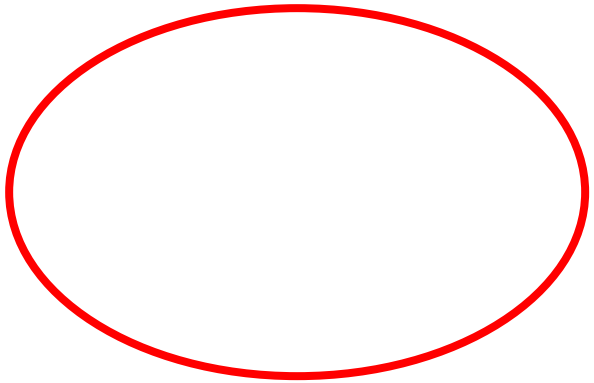

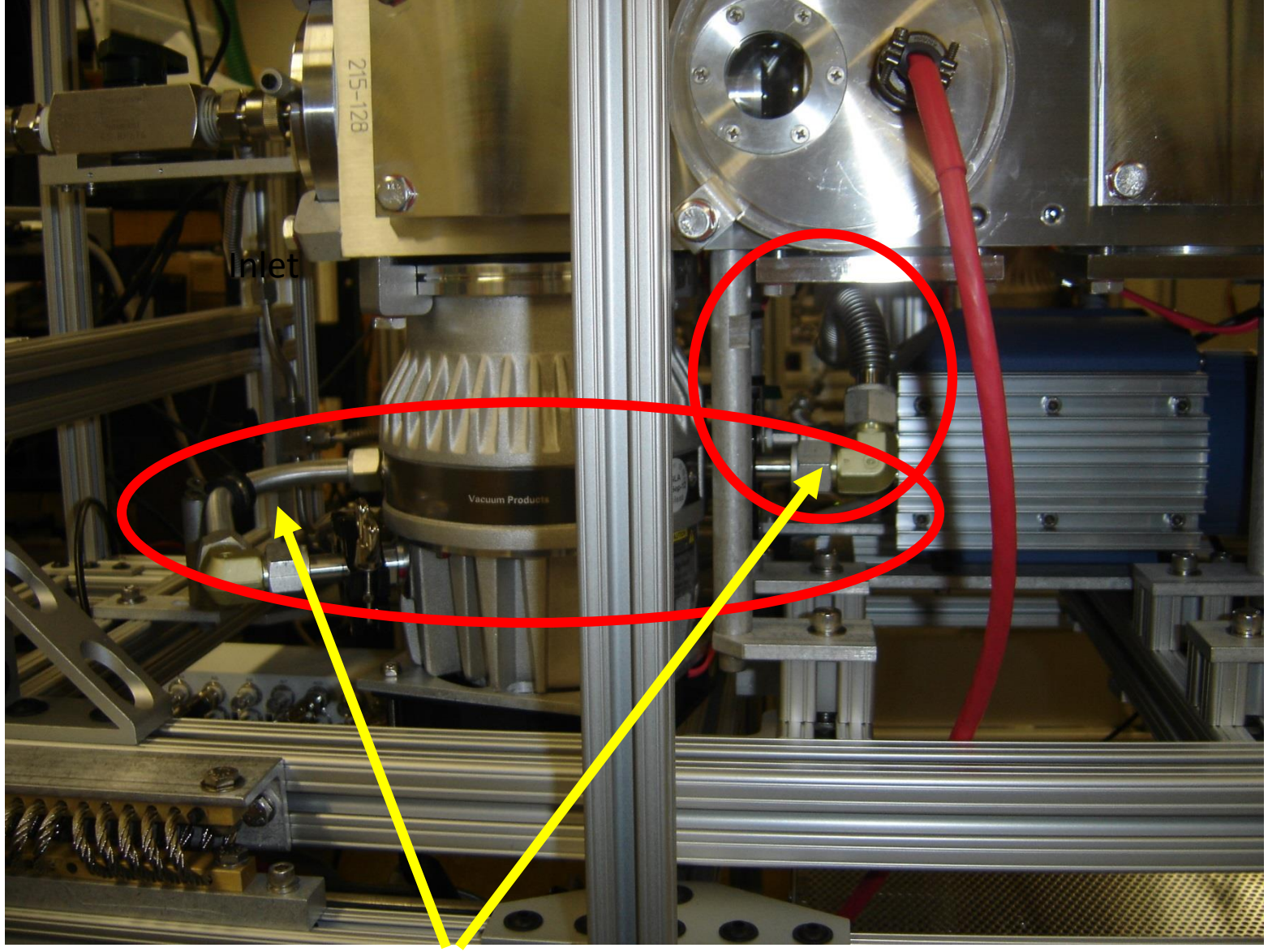

Aerodyne Research Inc.

Doesn't work as well here… But leaks here will cause a higher Backing Pressure

Consult Pump Currents, Lens and Backing Pressures to get a clue of where to look

Aerodyne Research Inc.

Filament Installation

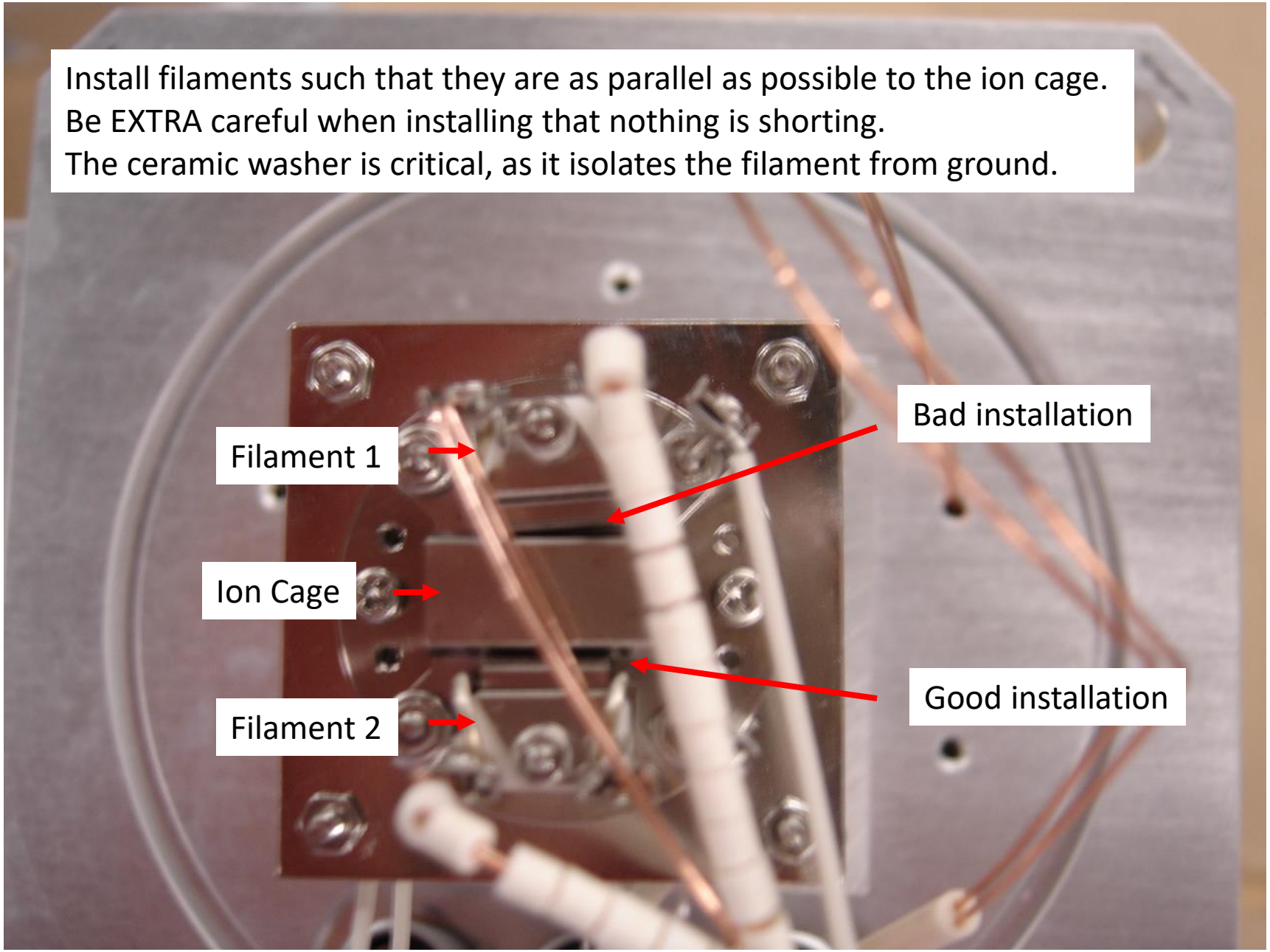
Install filaments such that they are as parallel as possible to the ion cage.
Be EXTRA careful when installing that nothing is shorting.
The ceramic washer is critical, as it isolates the filament from ground.
Filament 1
Ion Cage
Filament 2
Bad installation
Good installation

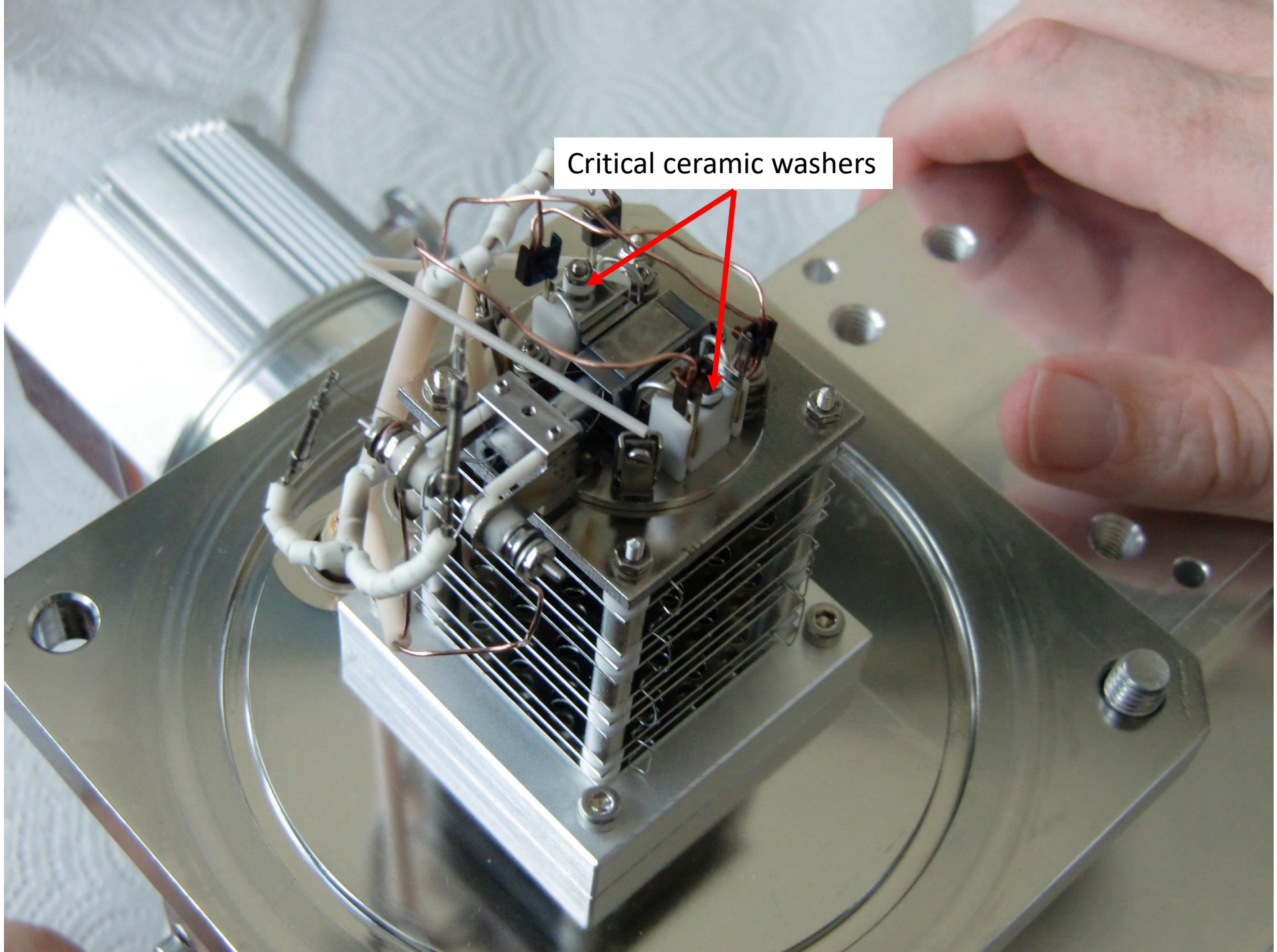
Critical ceramic washers

Aerodyne Research Inc.

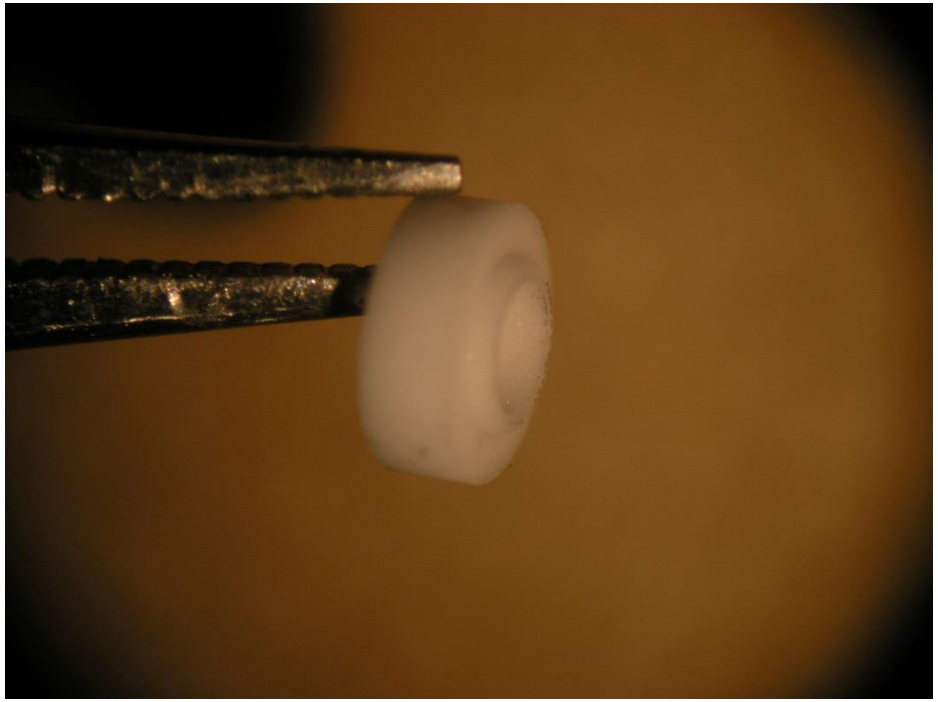

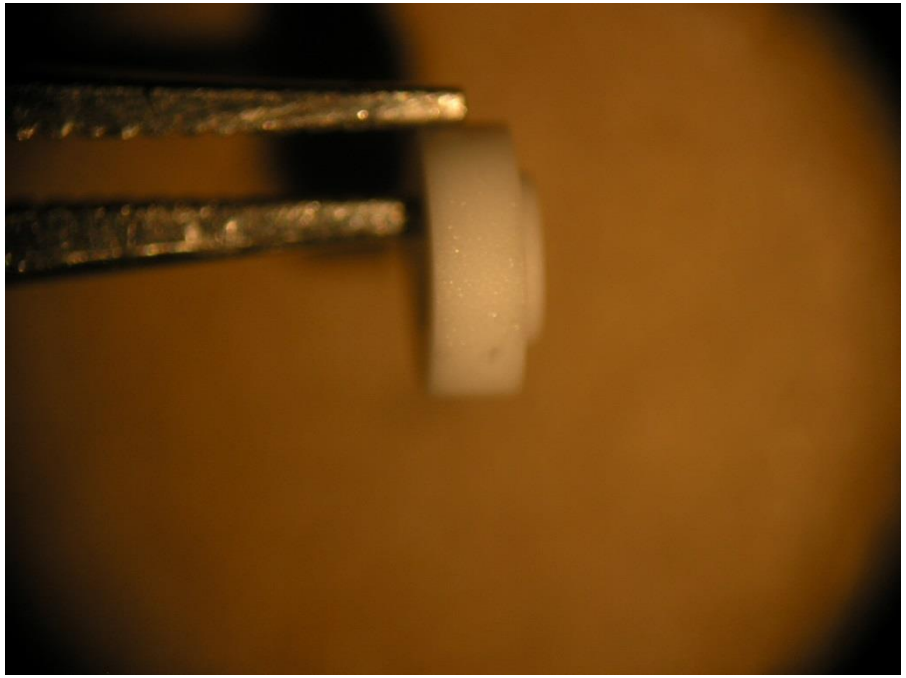

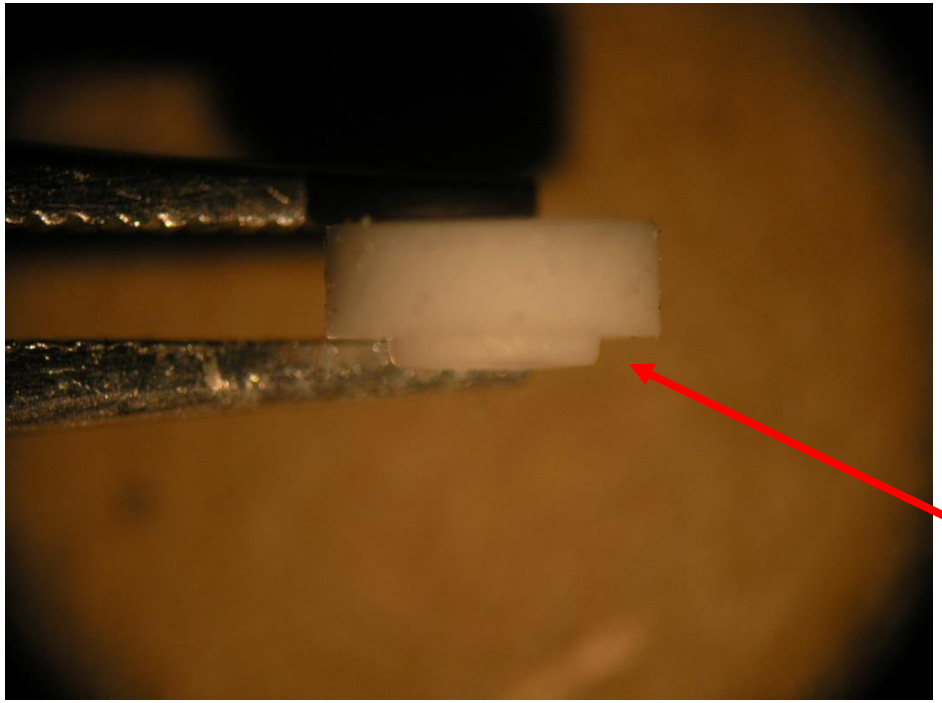

This side down!

Tuning Tip:

Aerodyne Research Inc.

- Tune *both* Filaments before leaving for the field.
  - This can save time and possibly prevent one from having to vent while in the field. Also, sometimes a filament does not tune as well as one would like, so one may get a better tune with the second filament.

AMS Maintenance

Aerodyne Research Inc.

- Always monitor pump performance
- Always monitor MD1 pressure (load/no load)
- Clean vacuum chamber surface
- Check for loose/missing connections/fasteners
- Clean cooling fan filters
- Check for stressed cables
- Dirt inside computer
- *“Dirt”* on computer HD (clean up and defrag)

What are the operating currents for all pumps?

Aerodyne Research Inc.

	Gas Load Off (mA)	Gas Load On (mA)	Delta T* (Degrees C) (Closed/Open)
P2	~ 450	~ 850	9/13.3
P3	~ 250	~ 300	9/9.3
P4	~ 200	~ 250	6/5.9
P5	< 200	< 200	6.2/6.5
P6	~ 200	~ 200	9.6/9.6

*Delta T = Pump Temp – Ambient Temp

AMS Pressure Measurements

What is the backing pump pressure?

What is the lens pressure?

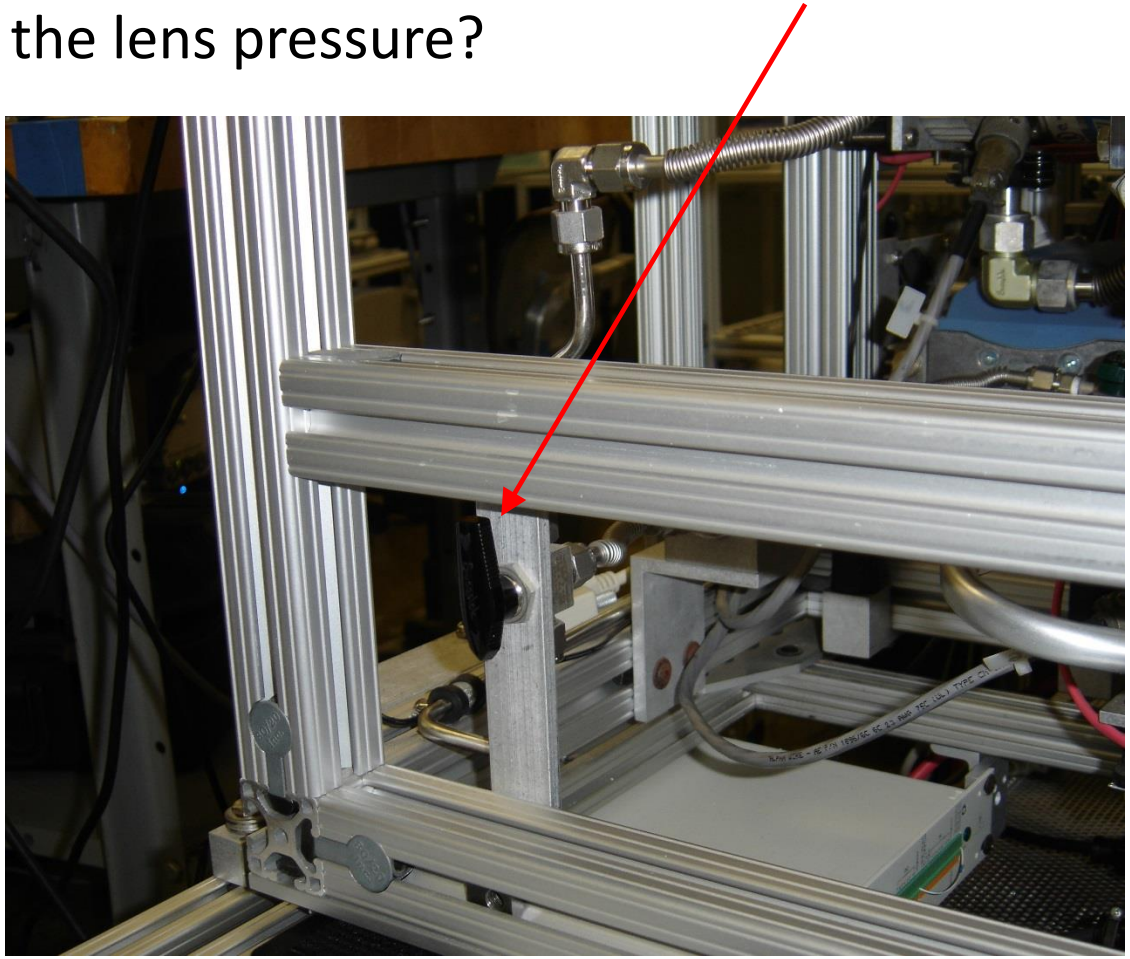

Aerodyne Research Inc.

Corrosion

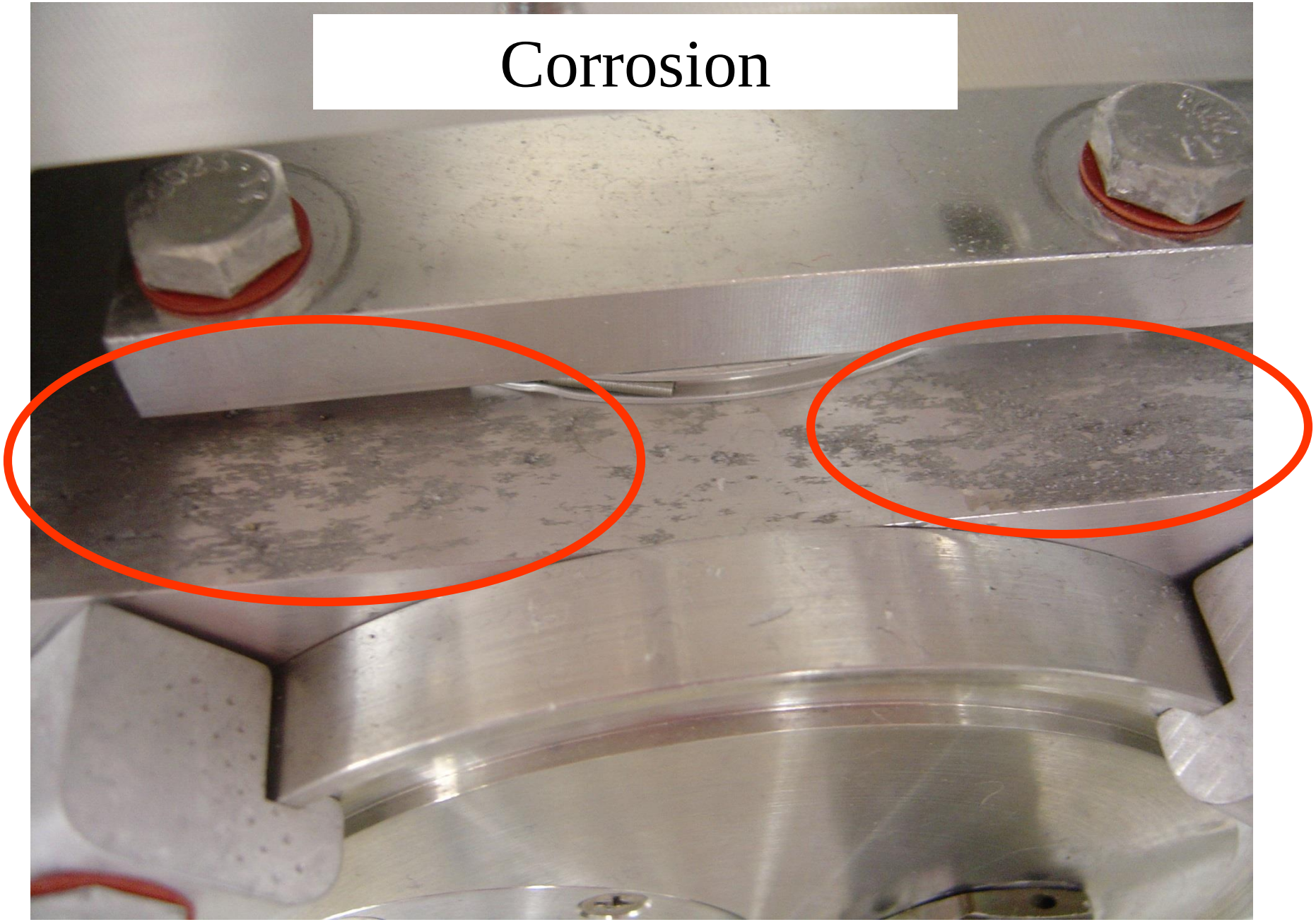

Corrosion

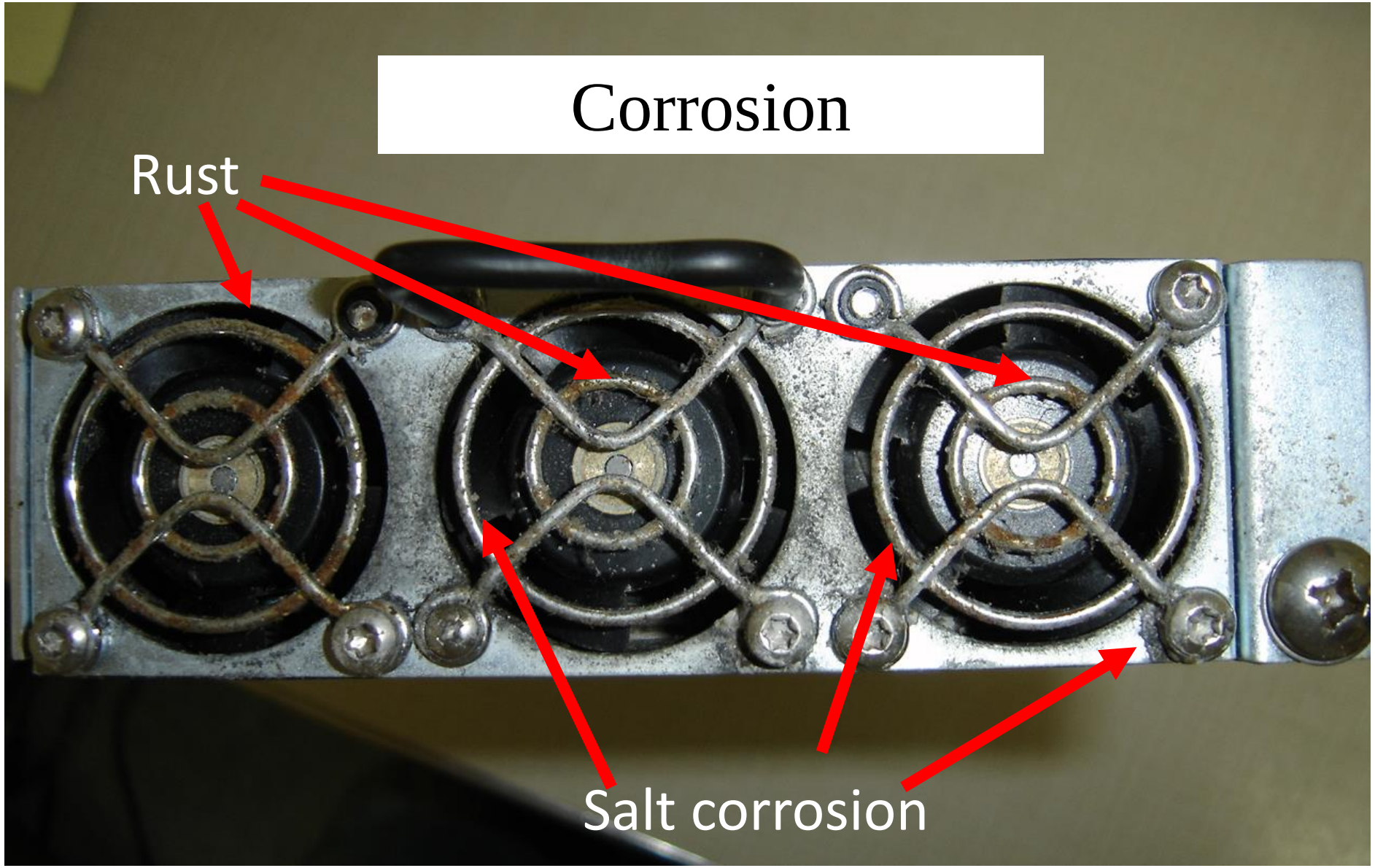

Inspect Shipping Container

Fork Lift Damage

Don’t leave instrument in the shipping container

Maintenance Issues, cont'd

Missing fasters

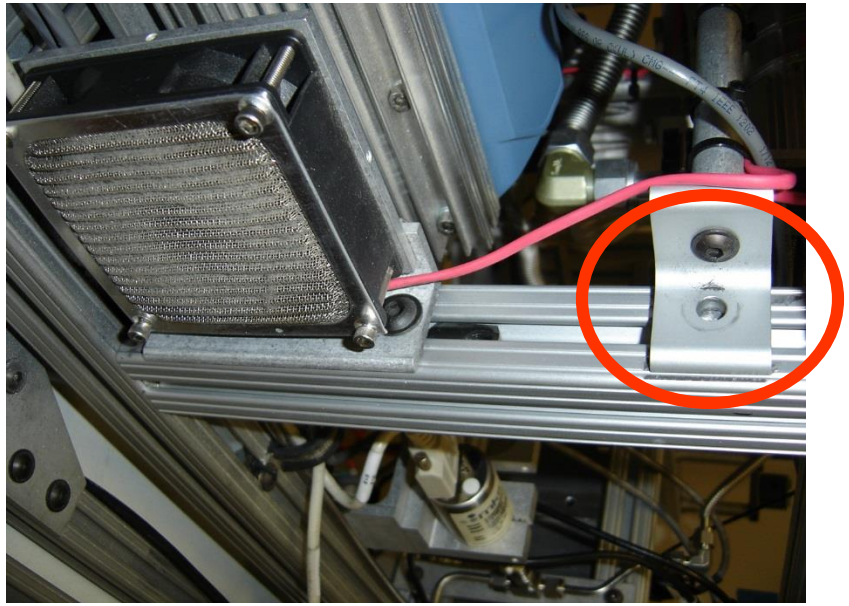

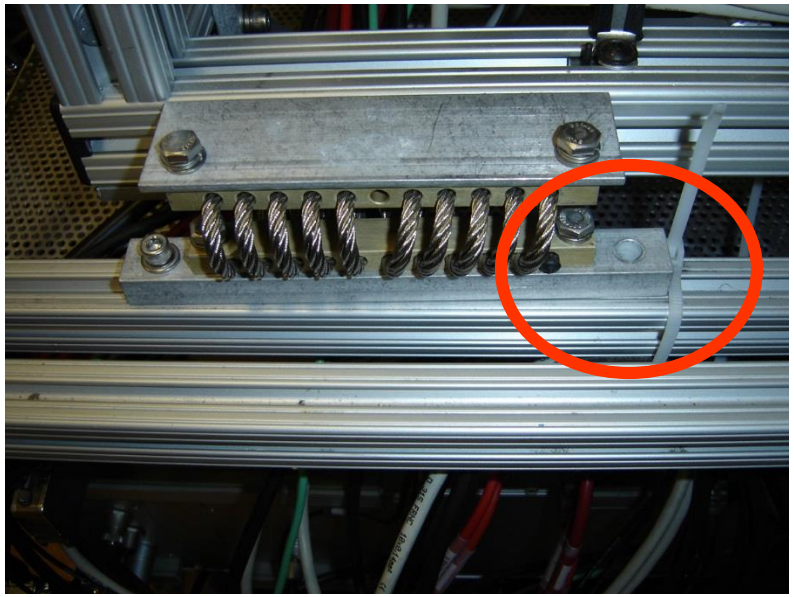

Maintenance Issues, cont'd

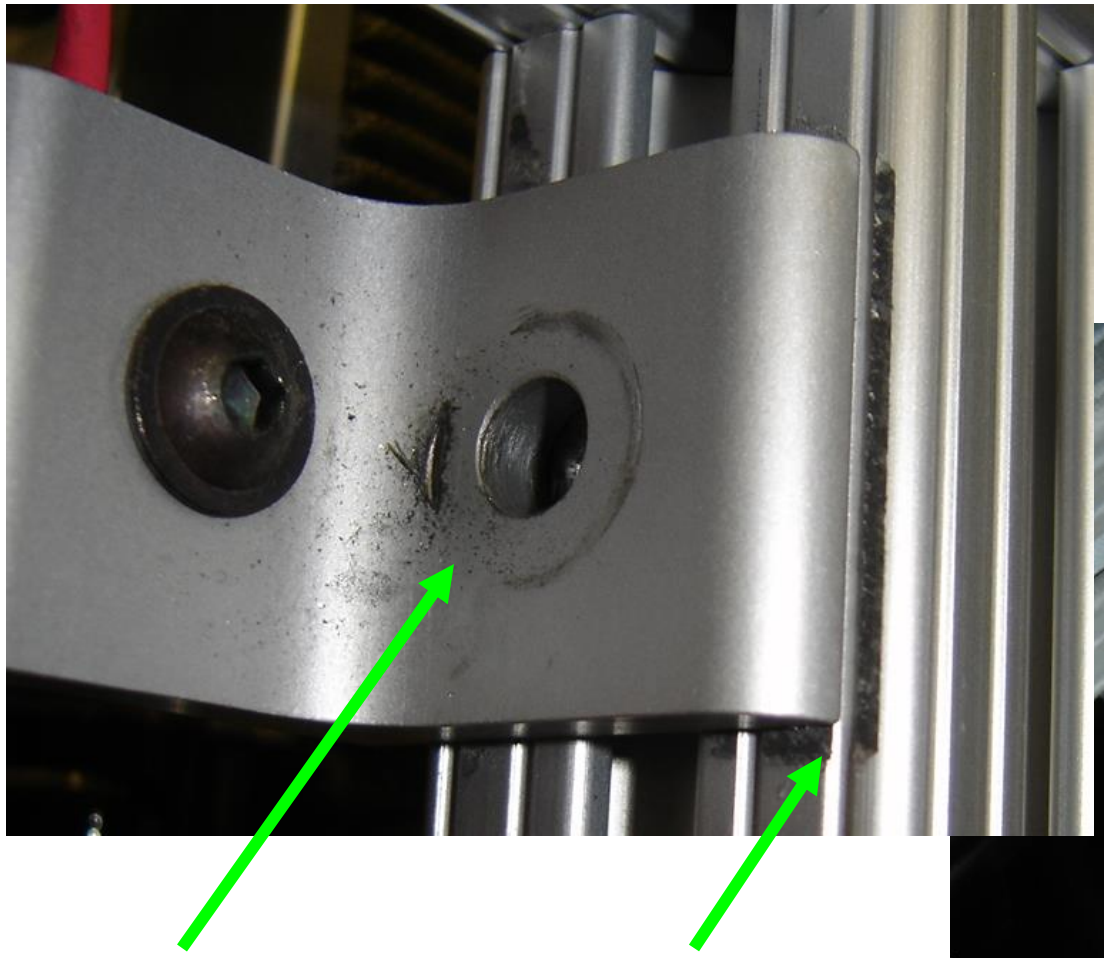

Missing fastener, chaffing metal

Aluminum dust

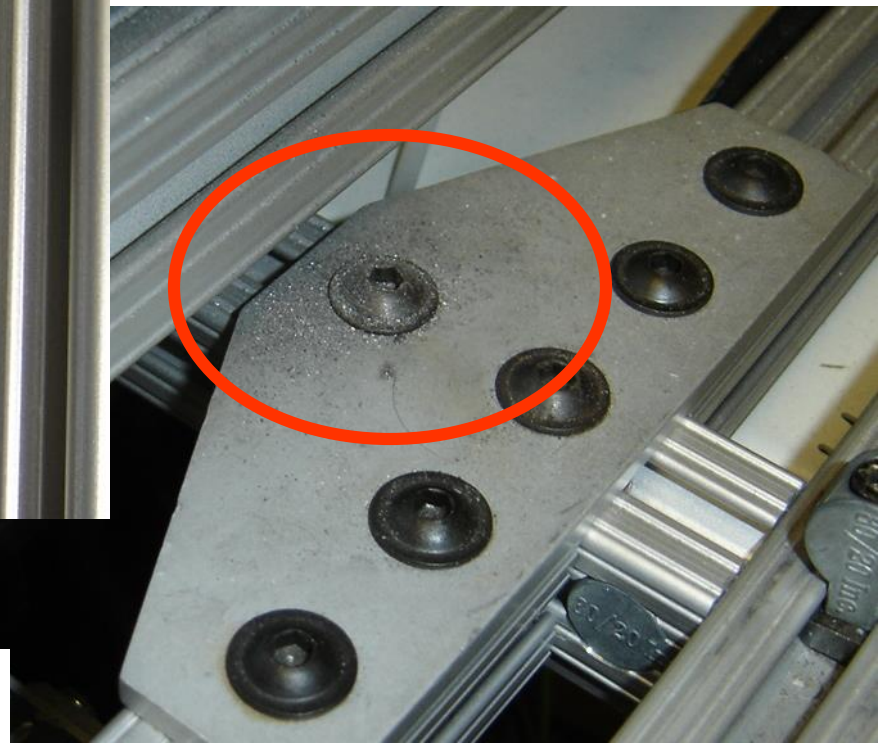

Maintenance Issues, cont'd

Dirty fan filter

Stressed cables

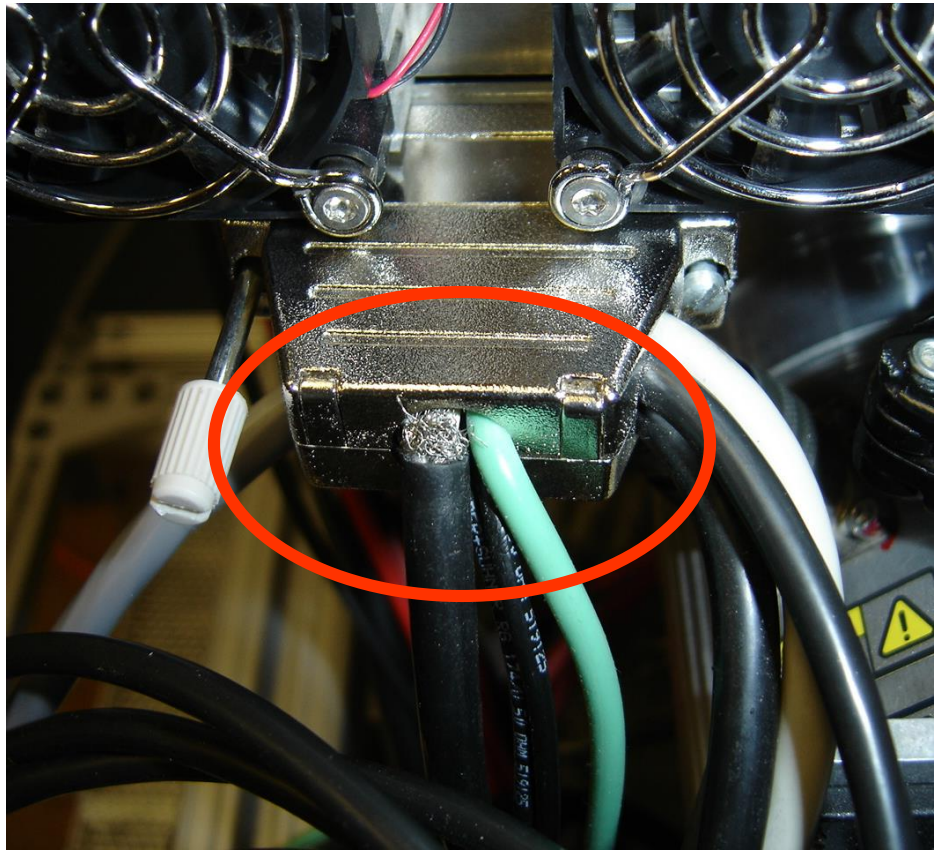

Dust Removal

Dust and Electronics are mortal enemies!

A Case Of Extreme Shipping Damage

Lesson: This really shows how hard your instrument could be jerked around in transport. Be careful when selecting transport. This crate was knocked over in transport.

V84/V304 Testing

V84

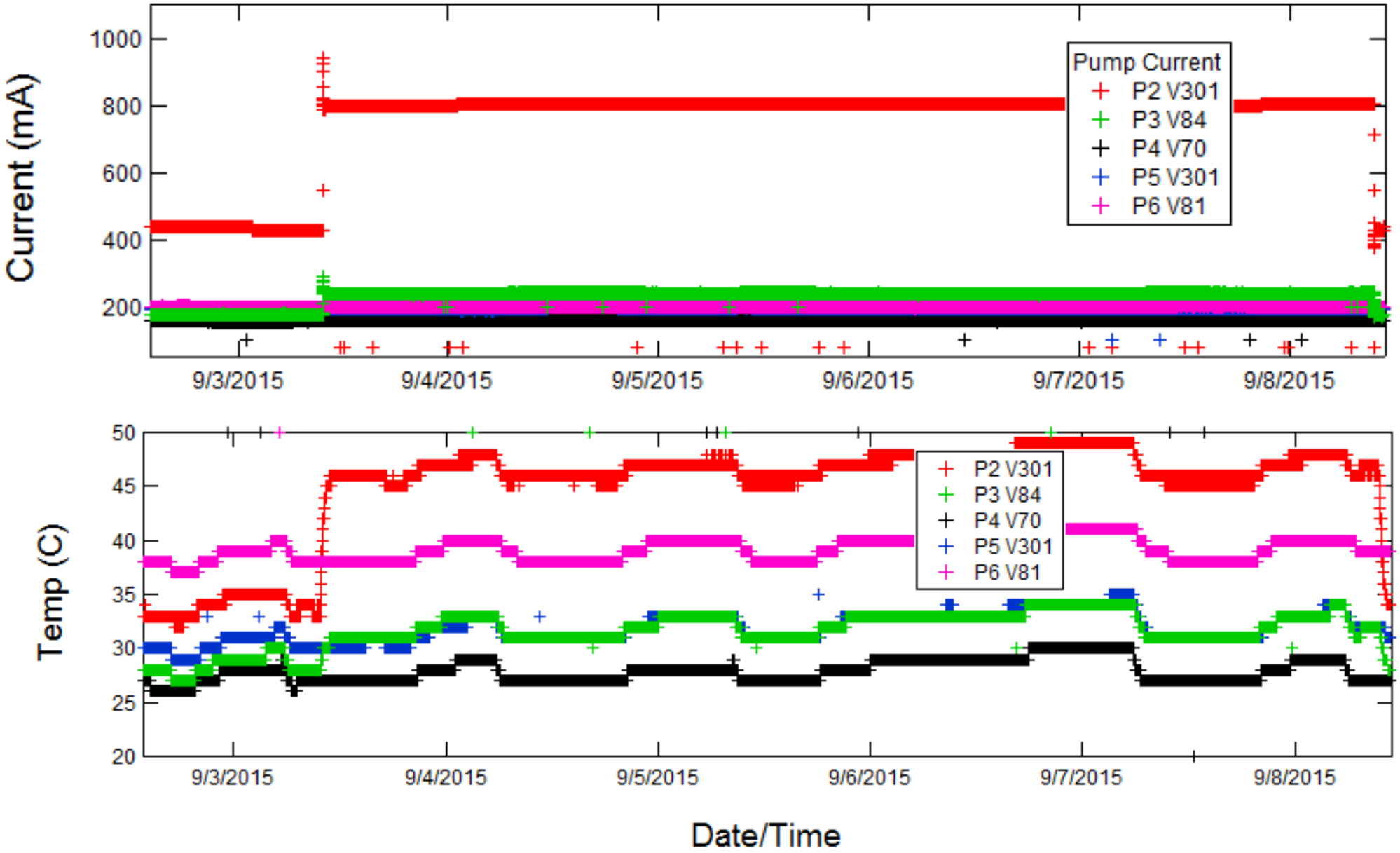
Current (mA)
1000
800
600
400
200
Pump Current
P2 V301
P3 V84
P4 V70
P5 V301
P6 V81
9/3/2015
9/4/2015
9/5/2015
9/6/2015
9/7/2015
9/8/2015
Temp (C)
50
45
40
35
30
25
20
P2 V301
P3 V84
P4 V70
P5 V301
P6 V81
9/3/2015
9/4/2015
9/5/2015
9/6/2015
9/7/2015
9/8/2015
Date/Time

Compares V301 System to V304 System
Data for all pumps is shown (85 cc/min gas load)

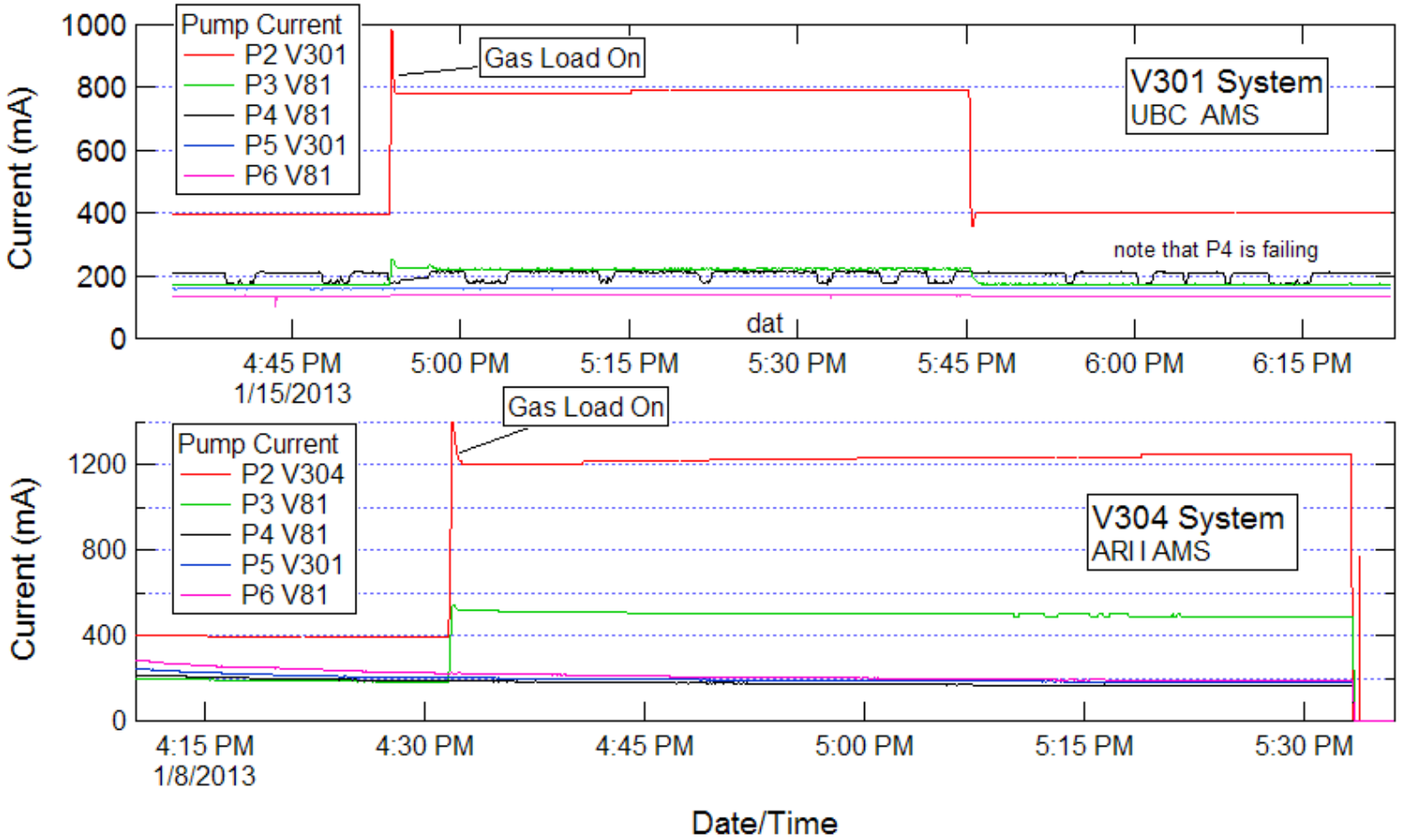

V304 running at 50% higher load than V301.
P3 also running ~50% higher.

Aerodyne Research Inc.

Compares V301 and V304 mounted on AMS at P2 position as load is turned on

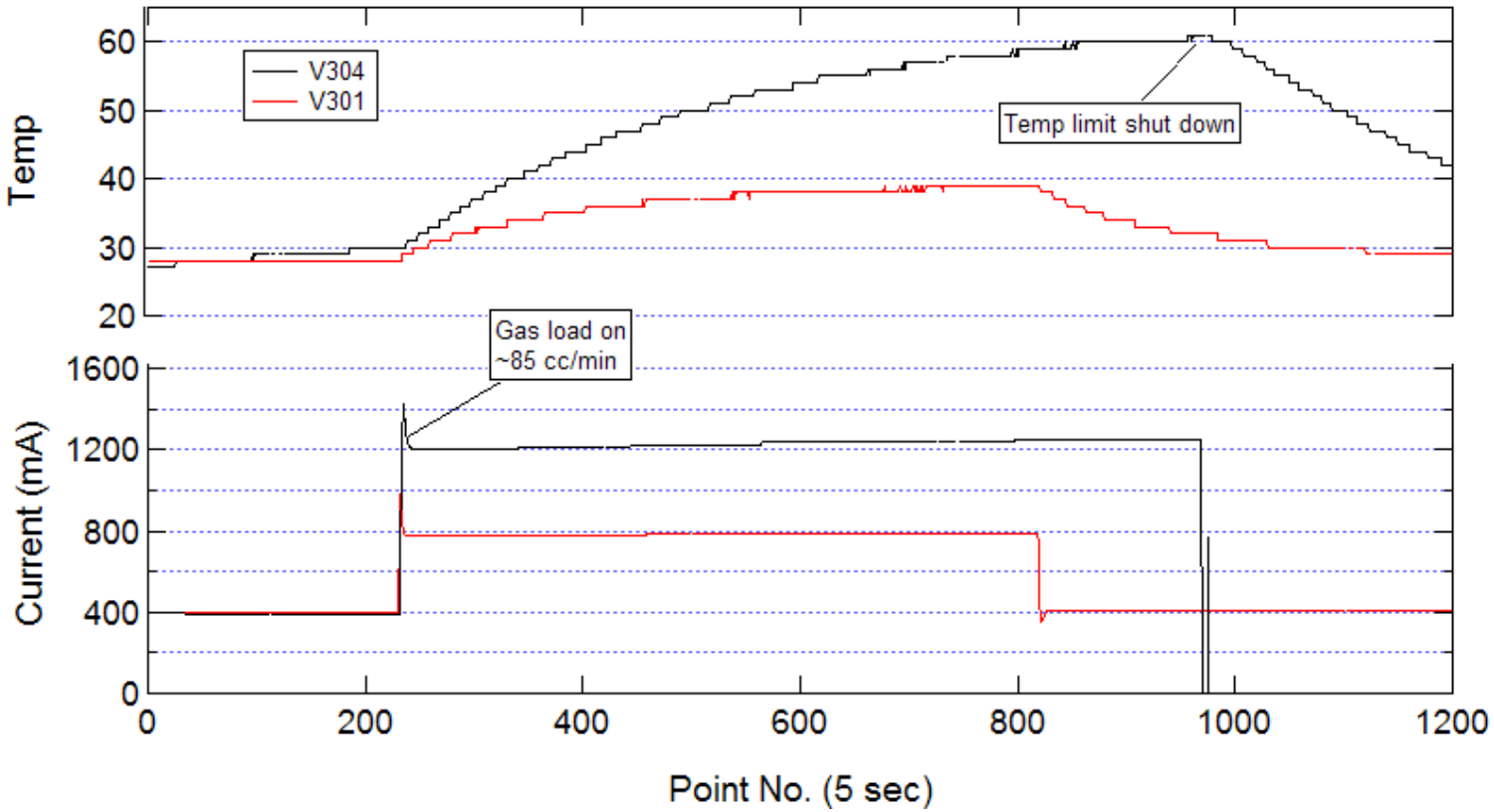

V304 ultimately shut down due to 60C temperature limit

Aerodyne Research Inc.

Pump Testing Summary

V84

- Cooling is critical. Recommended to obtain Agilent's cooling fan.
- Minor Replumbing will be necessary.
- Necessary adapter fittings are developed. (Agilent p/n 9699109M001 QS-T163)
- V84 will work with V84, V81, and V70 pump controllers.
- Several AMS systems are now running successfully with V84 Pumps.

V304

- V304 pump <u>will not</u> work on the AMS. Aerodyne will be able to obtain the V301 for the foreseeable future. Agilent will continue to supply OEM's with the V301.

Insertable Ionizer
and
Moveable Vaporizer

Aerodyne Research Inc.

Insertable Ionizer

Allow the removal of Ion Source without removing TOF

Moveable Vaporizer

Allow manipulation of vaporizer without breaking vacuum

Aerodyne Research Inc.

Insertable Ionizer
Original Design

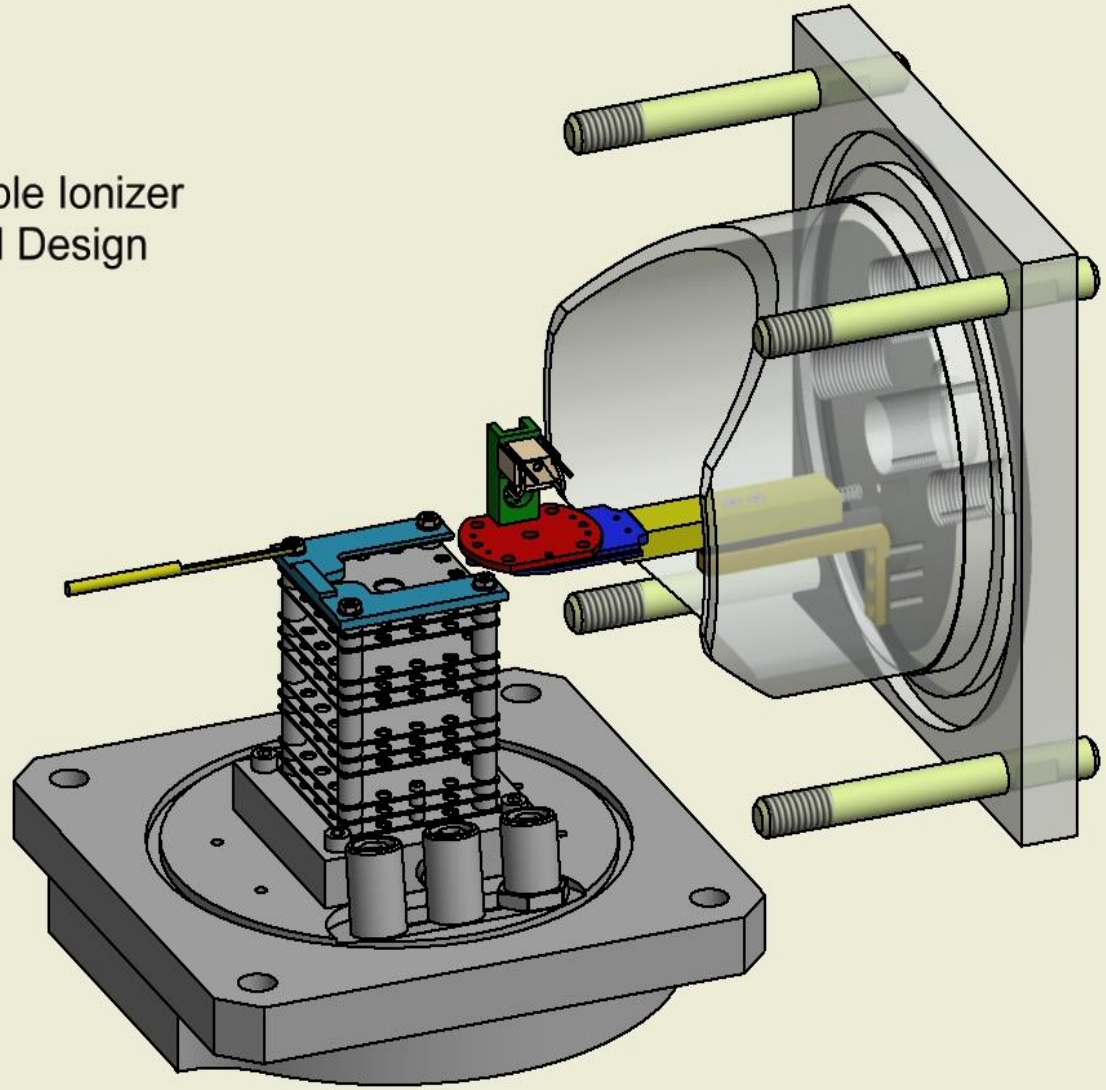

Aerodyne Research Inc.

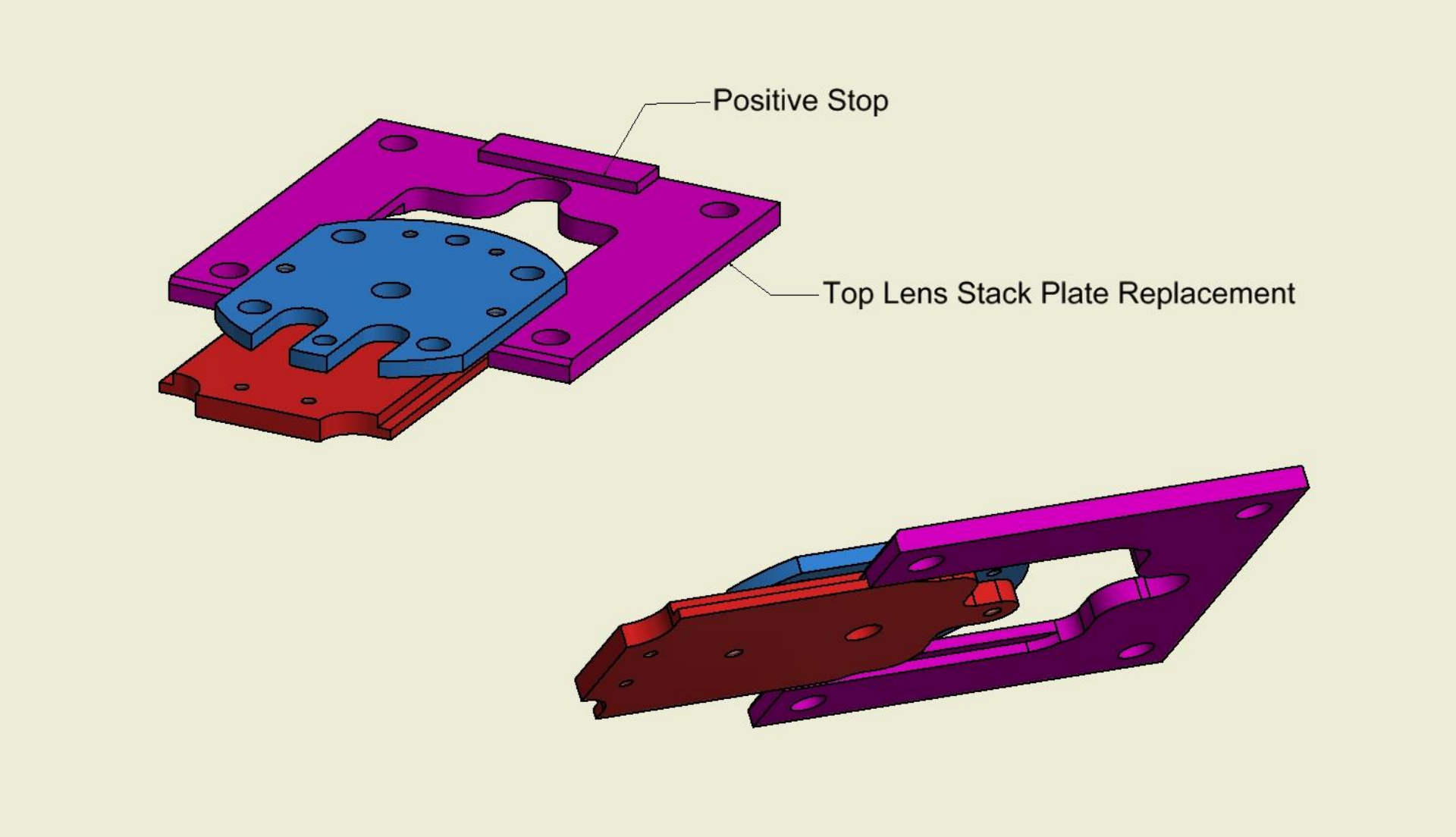

Aerodyne Research Inc.

Insertable Ionizer
w/ Moveable Vaporizer

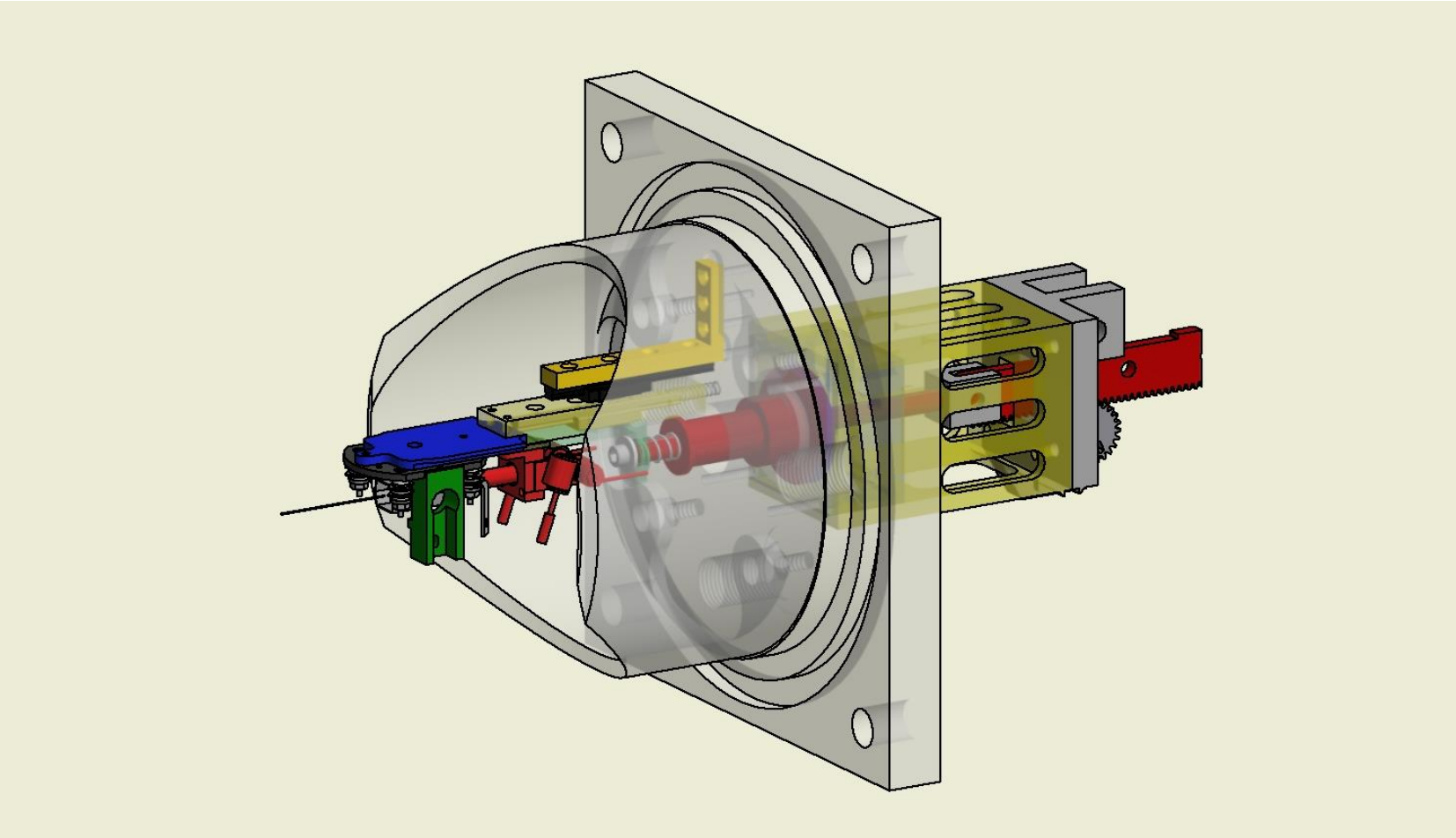

Aerodyne Research Inc.

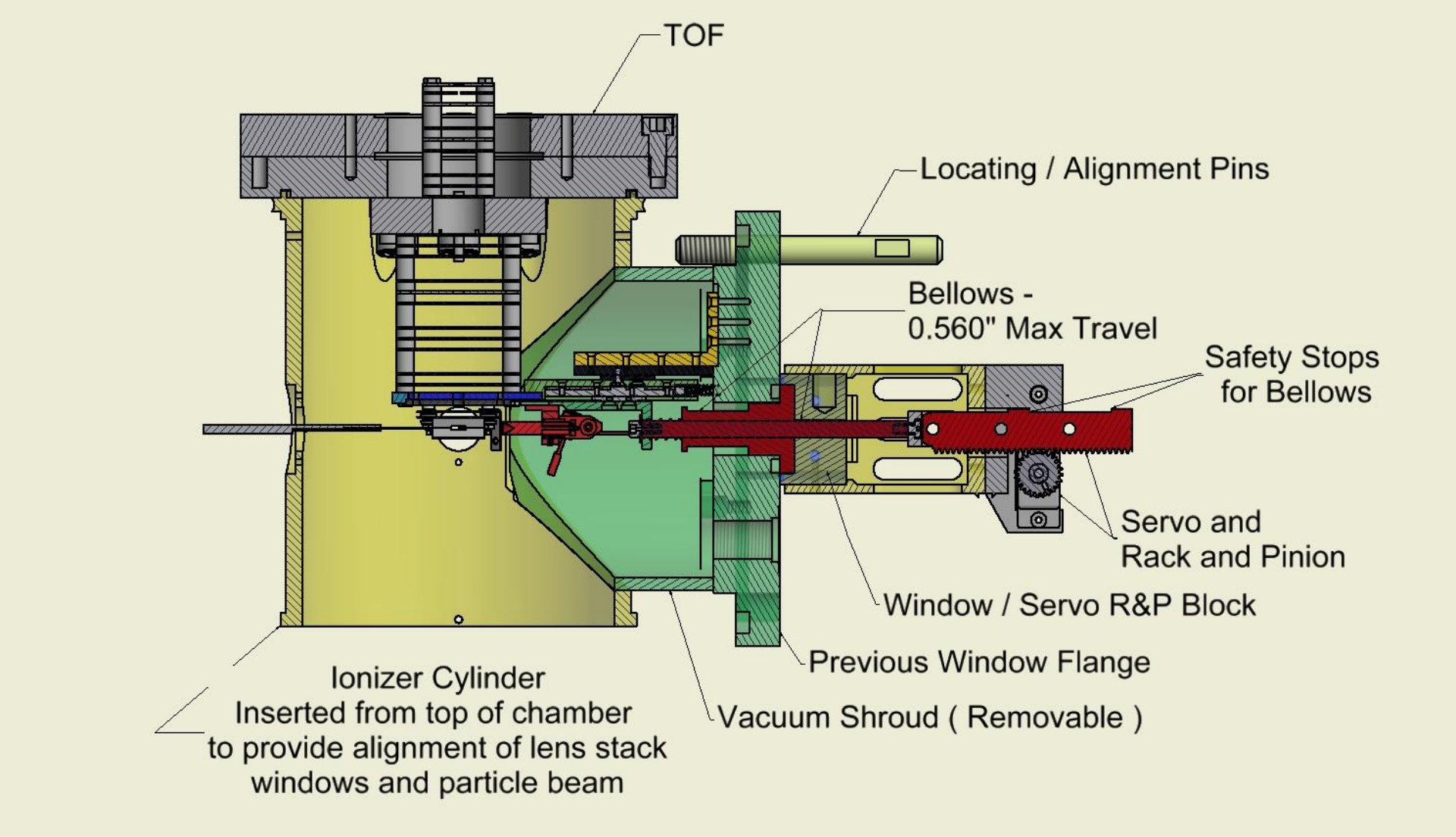

Aerodyne Research Inc.

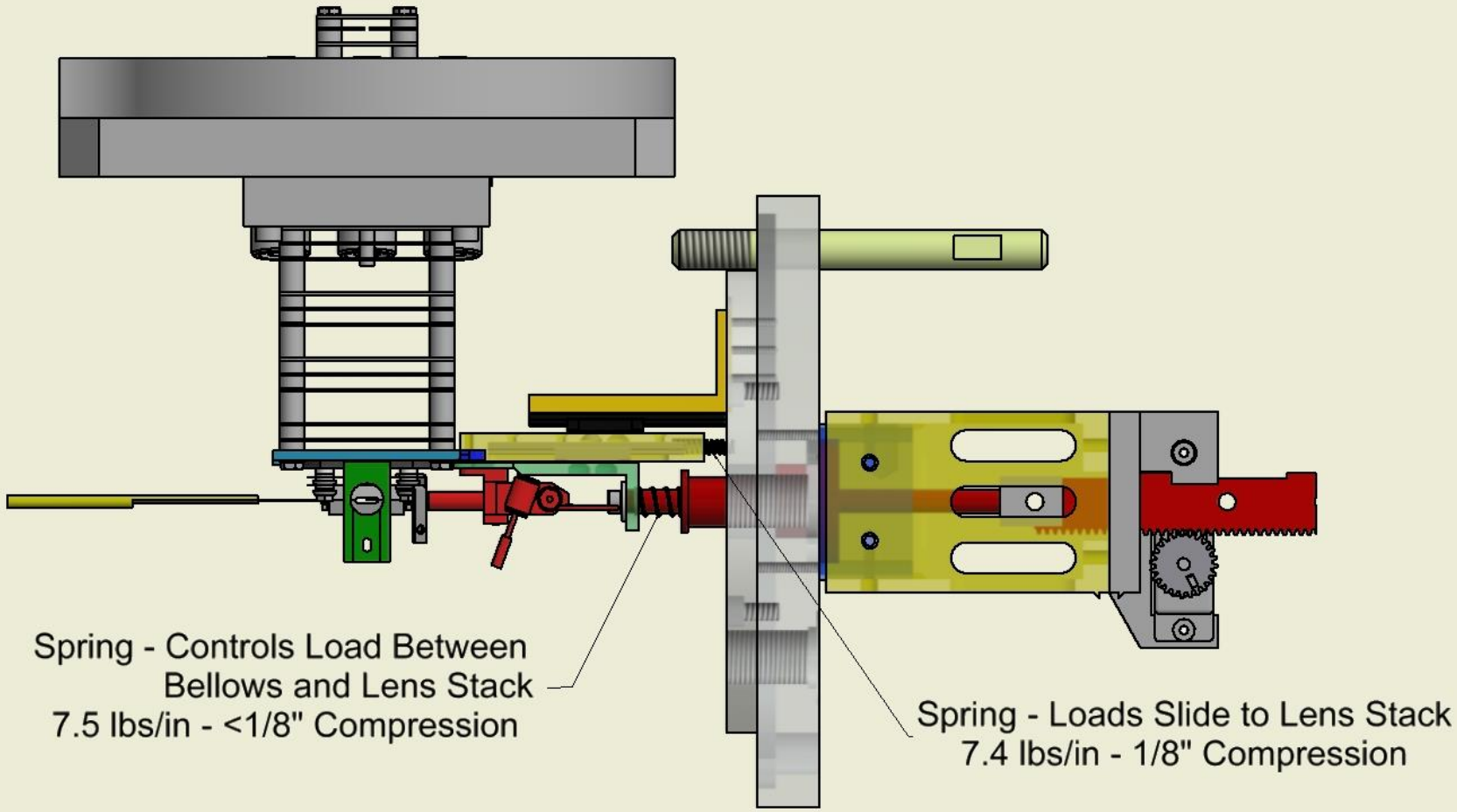

Aerodyne Research Inc.

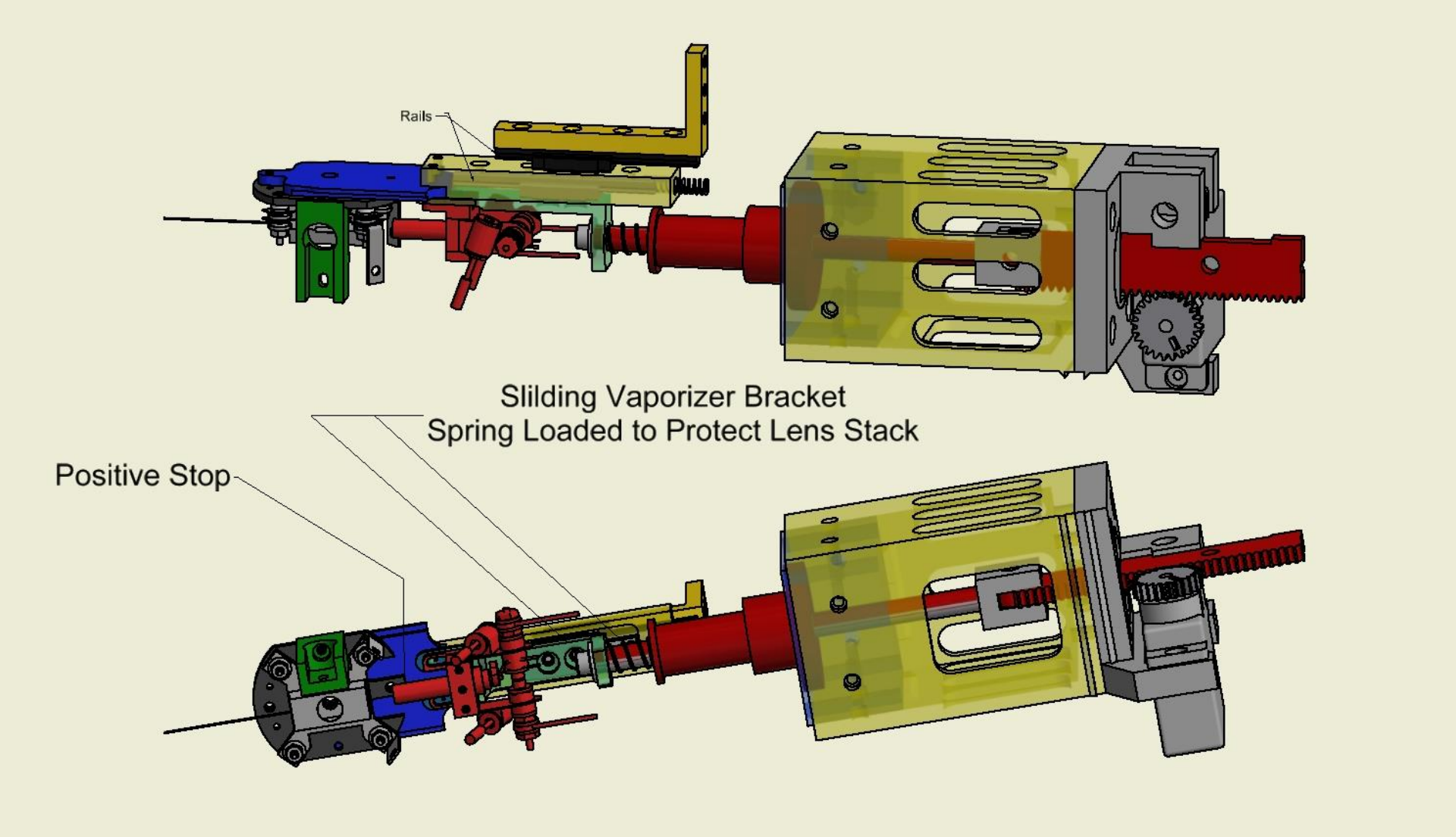

Aerodyne Research Inc.

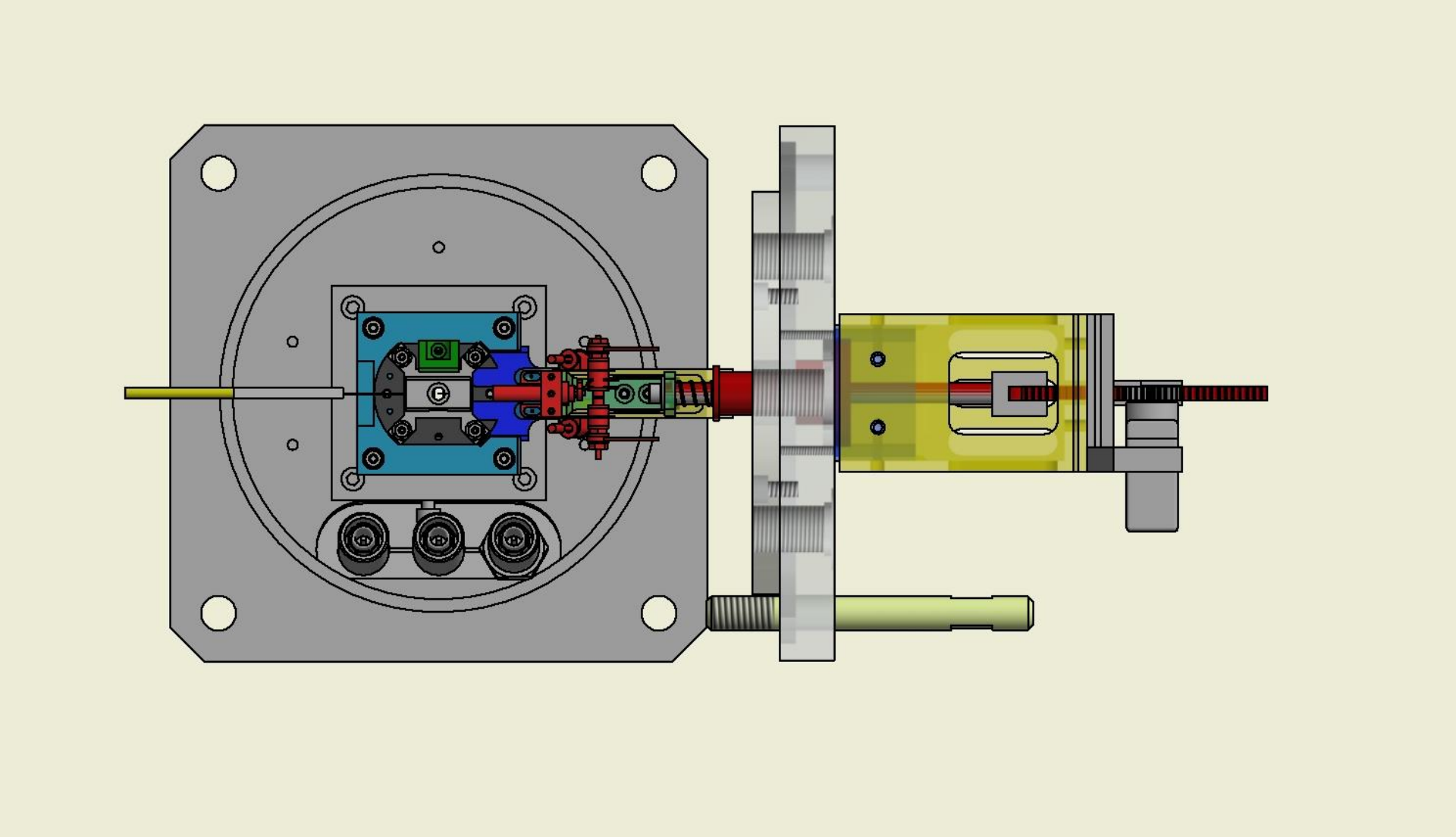

Aerodyne Research Inc.

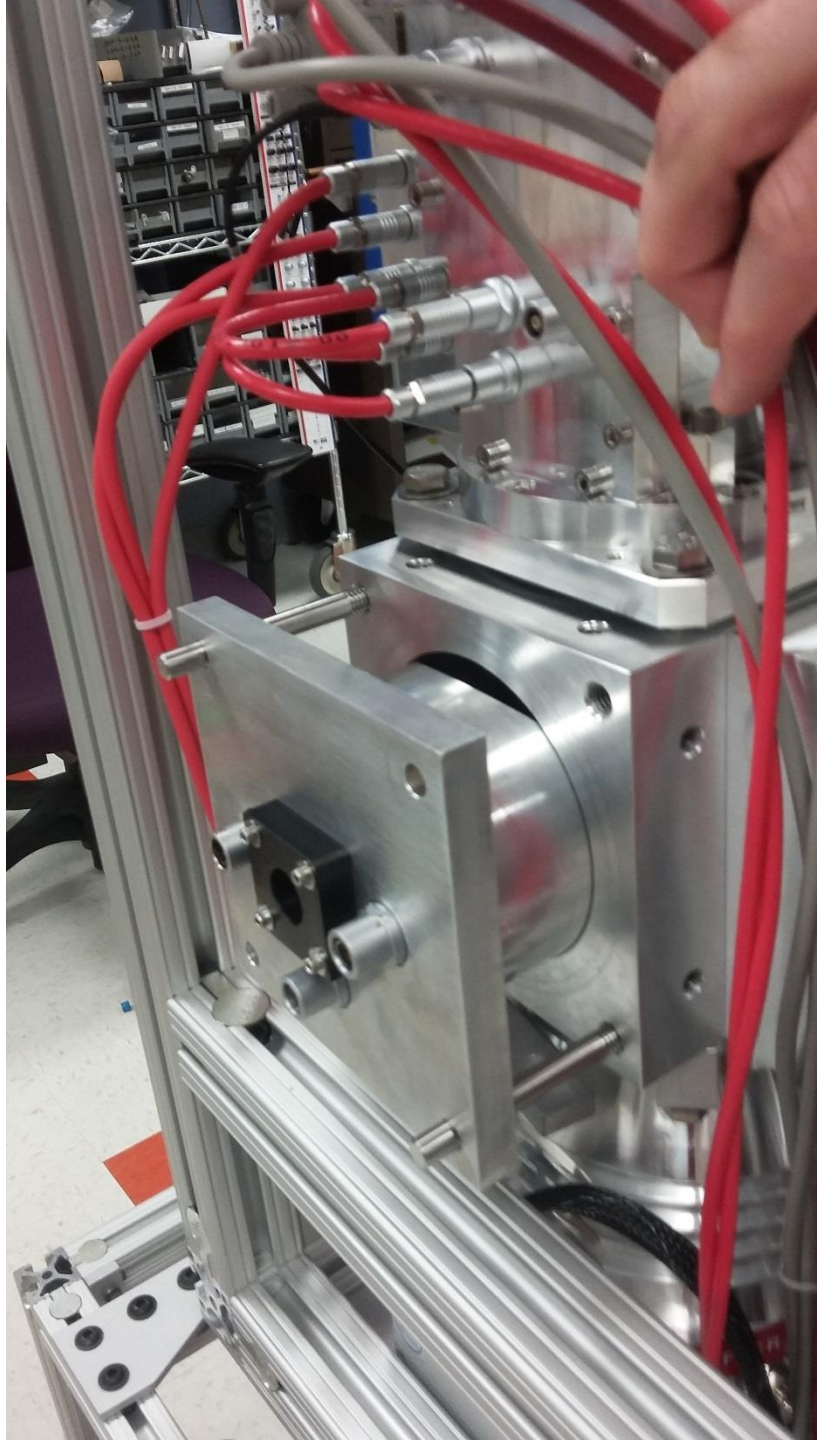

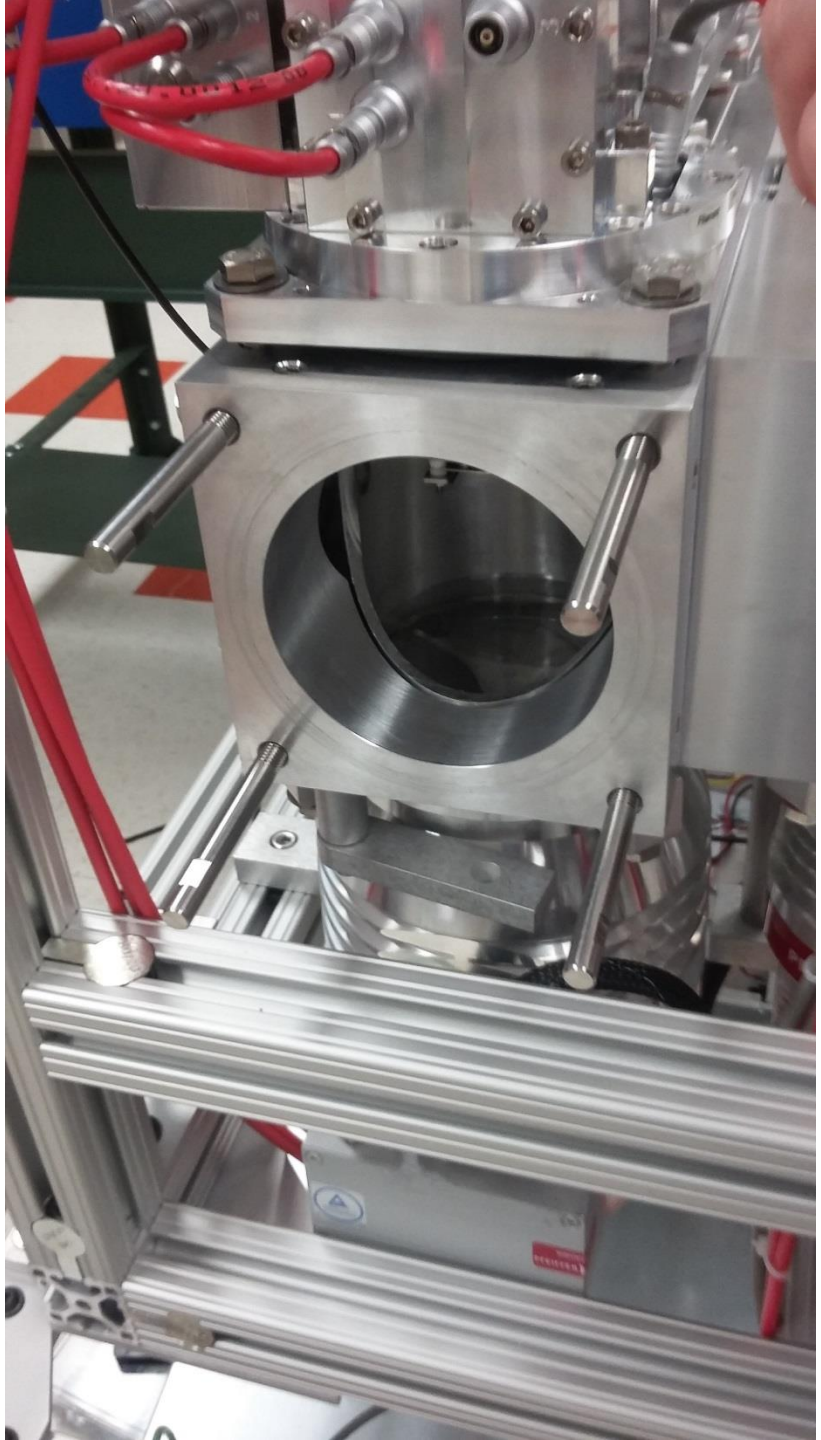

ACSM Hardware

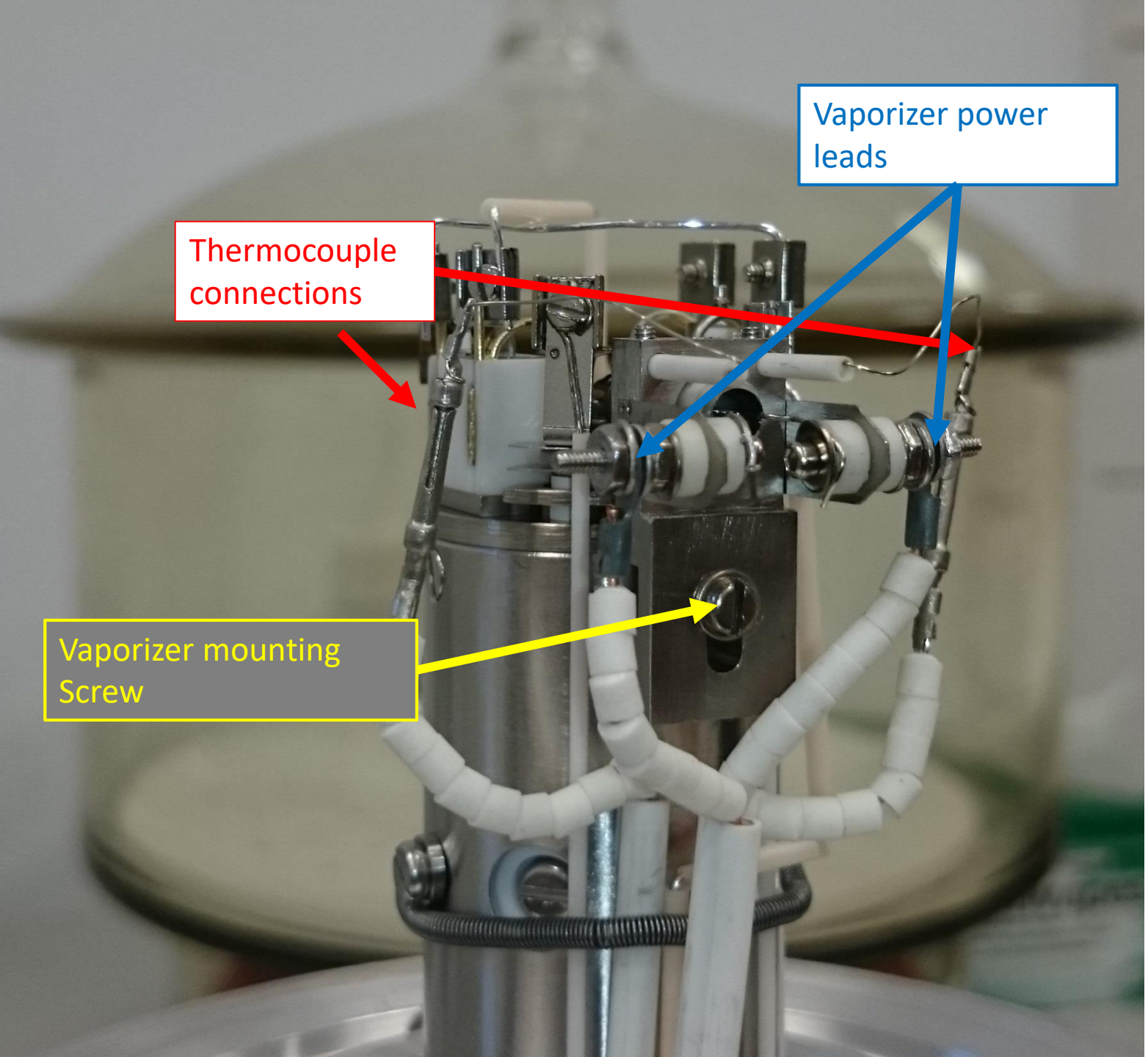

Always wait for vaporizer to cool before venting ACSM
Always wear gloves when working with any component that goes in high vacuum

Remove vaporizer power leads: Loosen nuts, don't need to remove since connectors are hook shaped and will slip off

Disconnect thermocouple connectors: I usually hold socket (bottom) with gloved hand and use small needle nose pliers to pull pins

Remove mounting screw

Things to be careful about when mounting ACSM Vaporizer

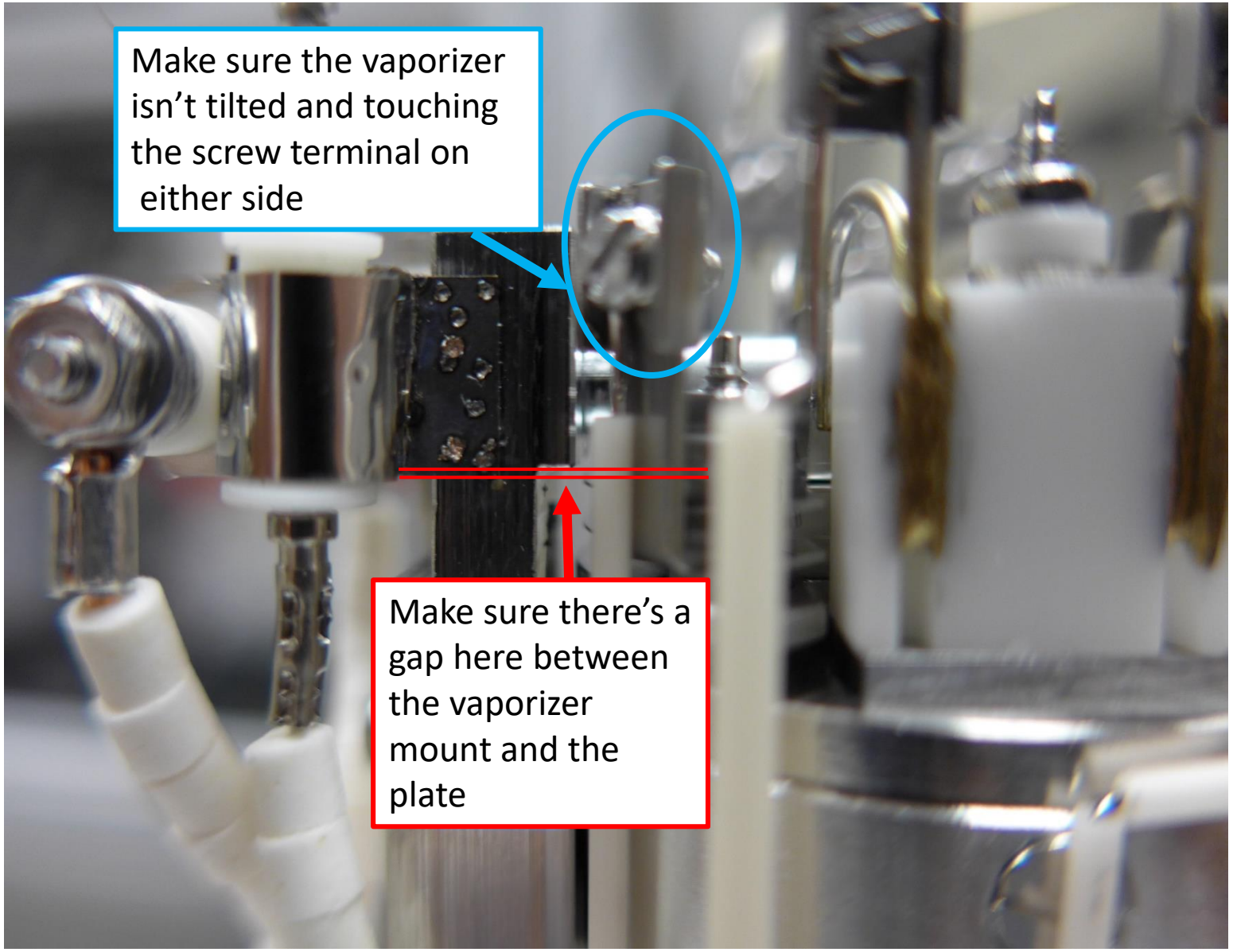

Move wires away from filament bodies by loosening screws on screw terminal using small phillips head screwdriver and tweezers or small pliers

Remove nut and ceramic washer from top of filament using small nut driver delivered with ACSM

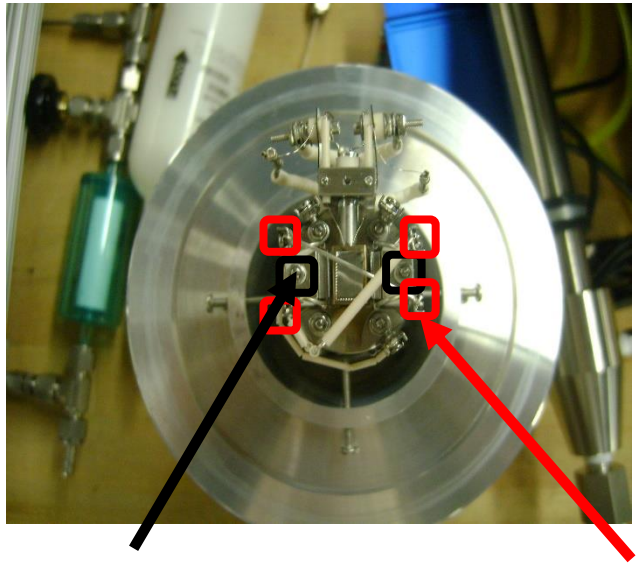

Nuts and ceramic washers

Screw terminals

Loosening screw in terminal

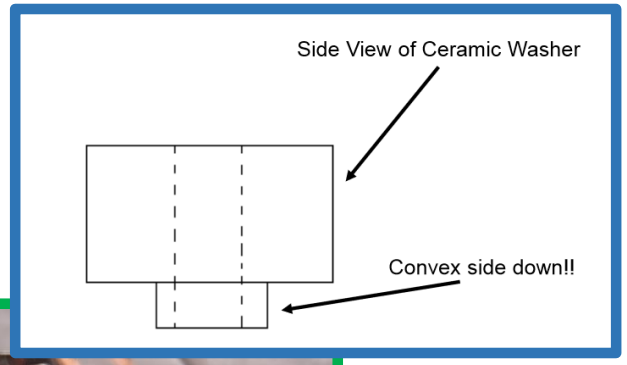

Once nut is off filament can be removed.
Under the filament there is a metal standoff – this should remain in place.
Replace with new filament.
Replace ceramic washer; note orientation.
Tighten down nut; ensure filament is installed parallel to ion cage as well as the standoff underneath the filament
Reattach wires using screw terminals terminals
Check for continuity and shorts.
- There should be continuity between all four filament screw terminals
- There should not be continuity between those terminals and any other screw terminal, ground, or the vaporizer.

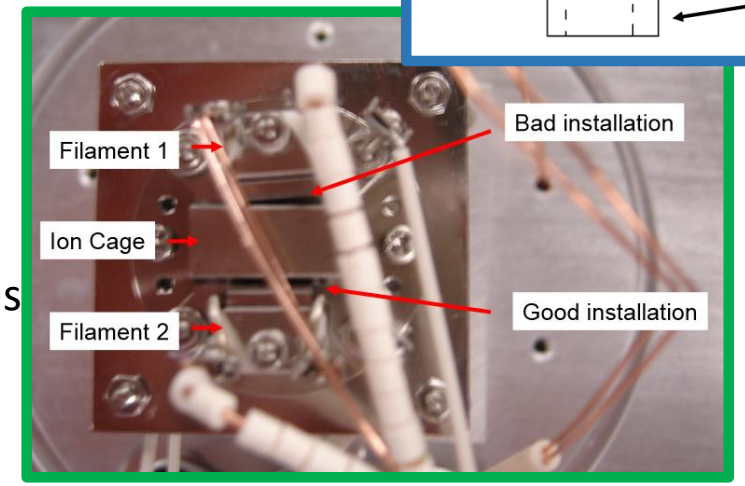

How to fix valve that is turning in opposite direction than what is indicated in software

13-May 2016

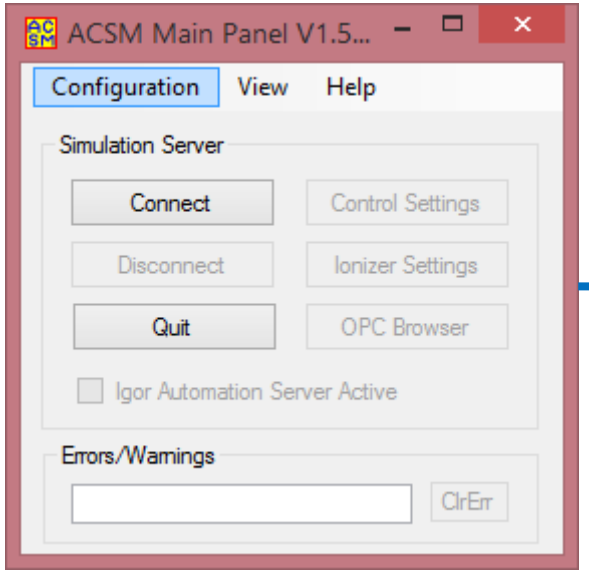

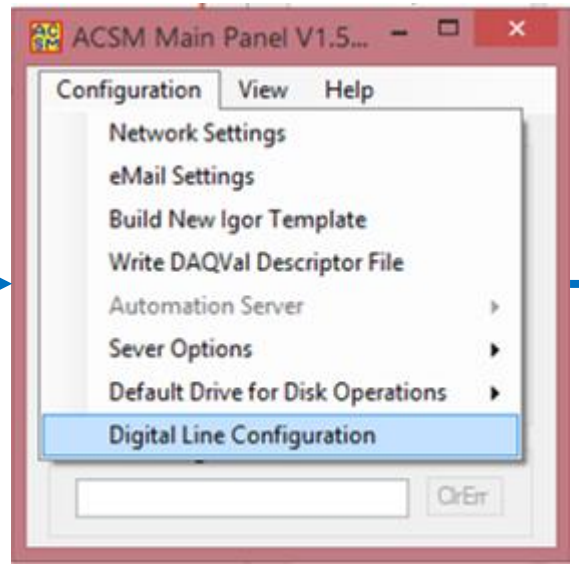

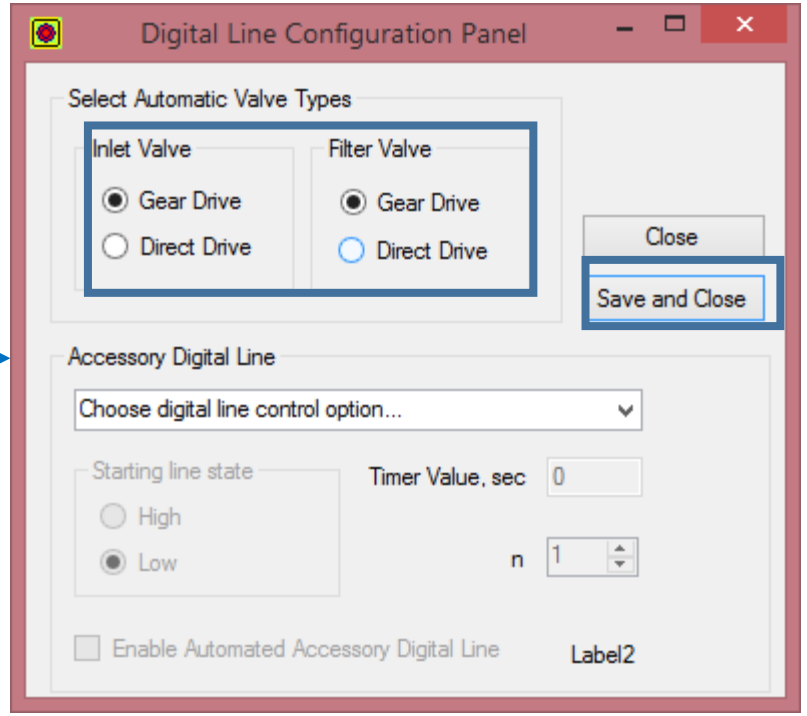

1. On ACSM DAQ Main Panel select “Digital Line Configuration” from “Configuration” dropdown menu.
2. In “Digital Line Configuration Panel” switch the valve type of the valve that’s switching wrong.
3. In same panel click “Save and Close”

HP 300E on first stage

- 4-5°C Cooler under standard conditions (~85cm^3/min load)

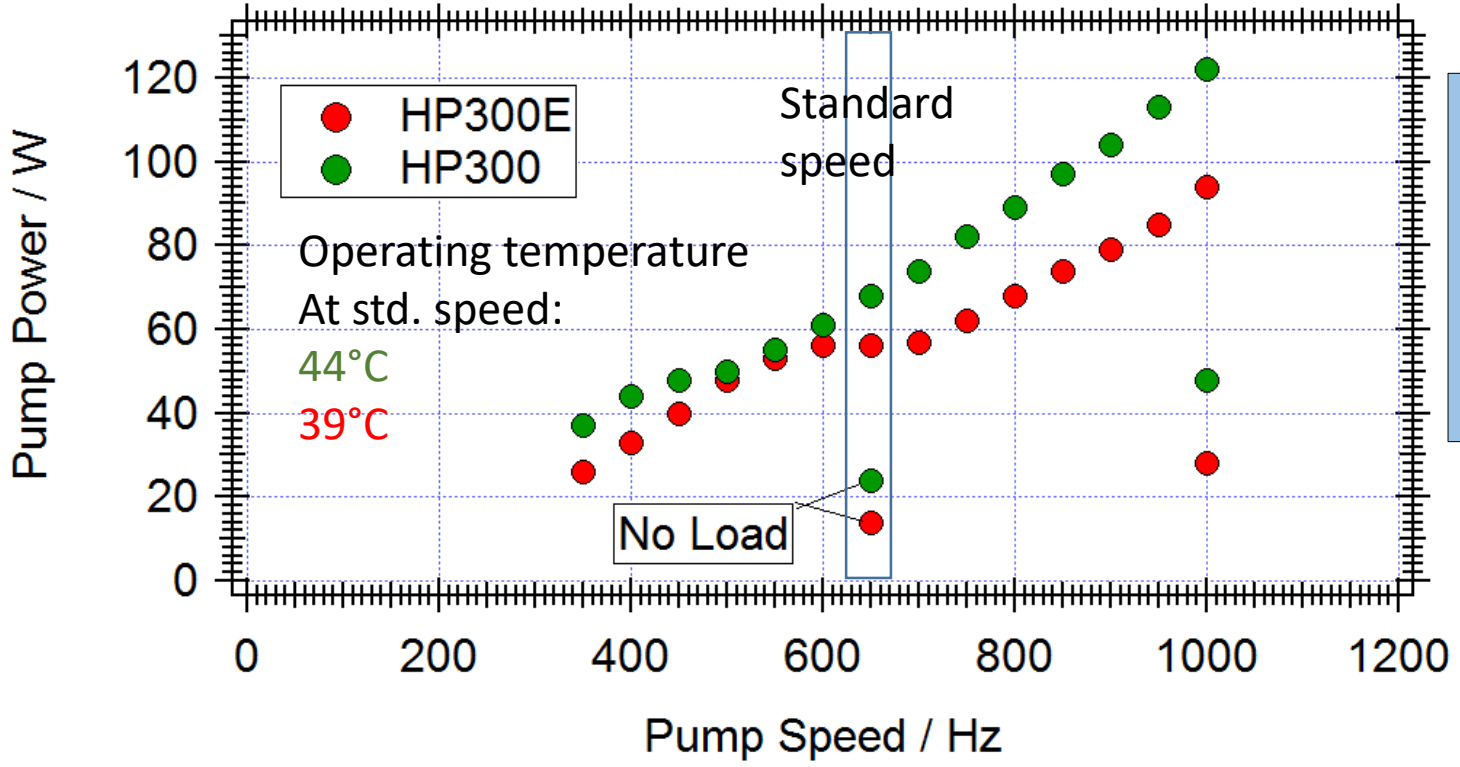

This will be a nice option for a little higher maximum ambient temperature if/when Pfeiffer starts to make available

HP300H on final stage

- Pressure in MS Region With Valve Open
  - HP300H = 6.9×10^{-8} Torr (1 day of pumping)
  - HP300 = 5.8×10^{-8} Torr
  - No significant difference in MS signal with same single ion

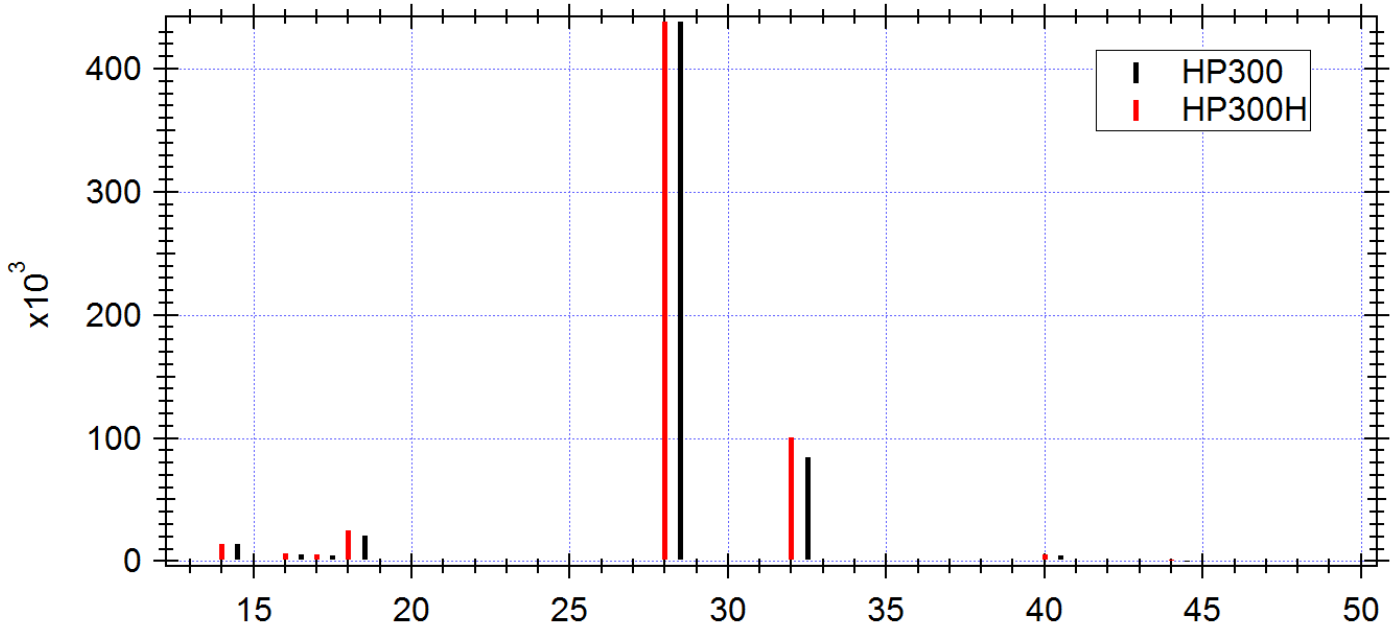

TOF-ACSM Auto Shutdown Module

Plug AC/DC converter (<10VDC) into same circuit as UPS, but not into UPS.
Connect to this to one of the Analog Input channels (3-6)
In workspace editor, Safe Shutdown box do the following:

- Check “Active” checkbox
- Set “Voltage threshold” to some value lower than the voltage of your converter
- Set “Voltage channel” to the number of the AI channel you connected to
- Set “Time to wait” to some value which is less than the time you expect your UPS to power the system

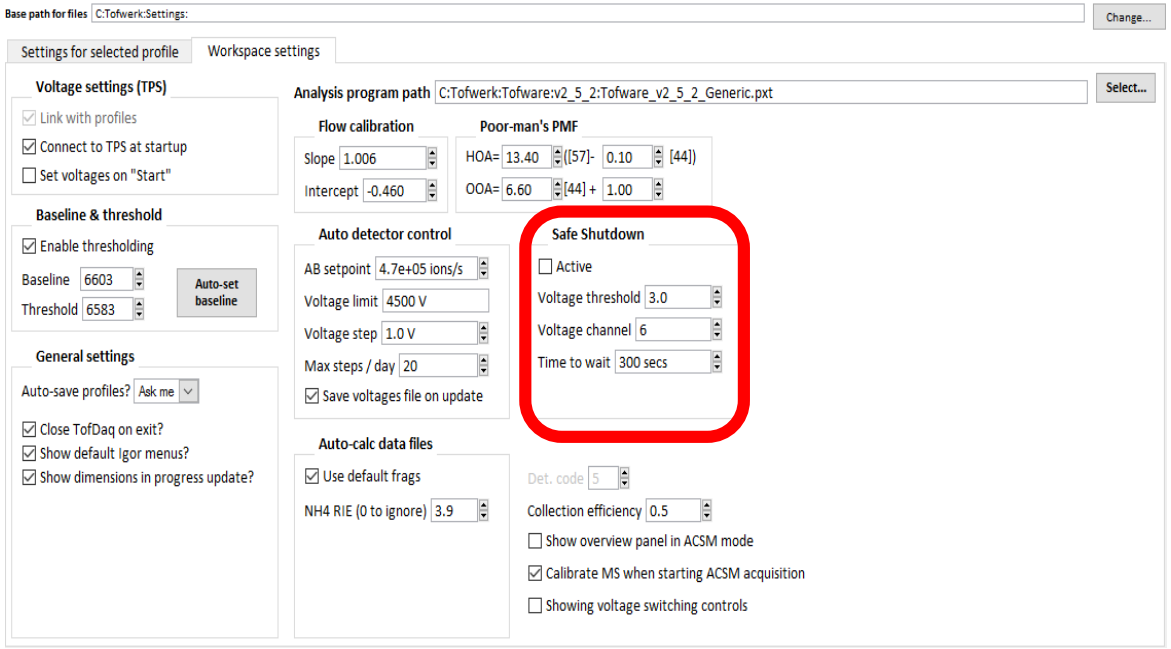

June 28, 2016
DOE ACSM with Pulser Flange Removed
Indicated screw was causing intermittent pulser short to ground.

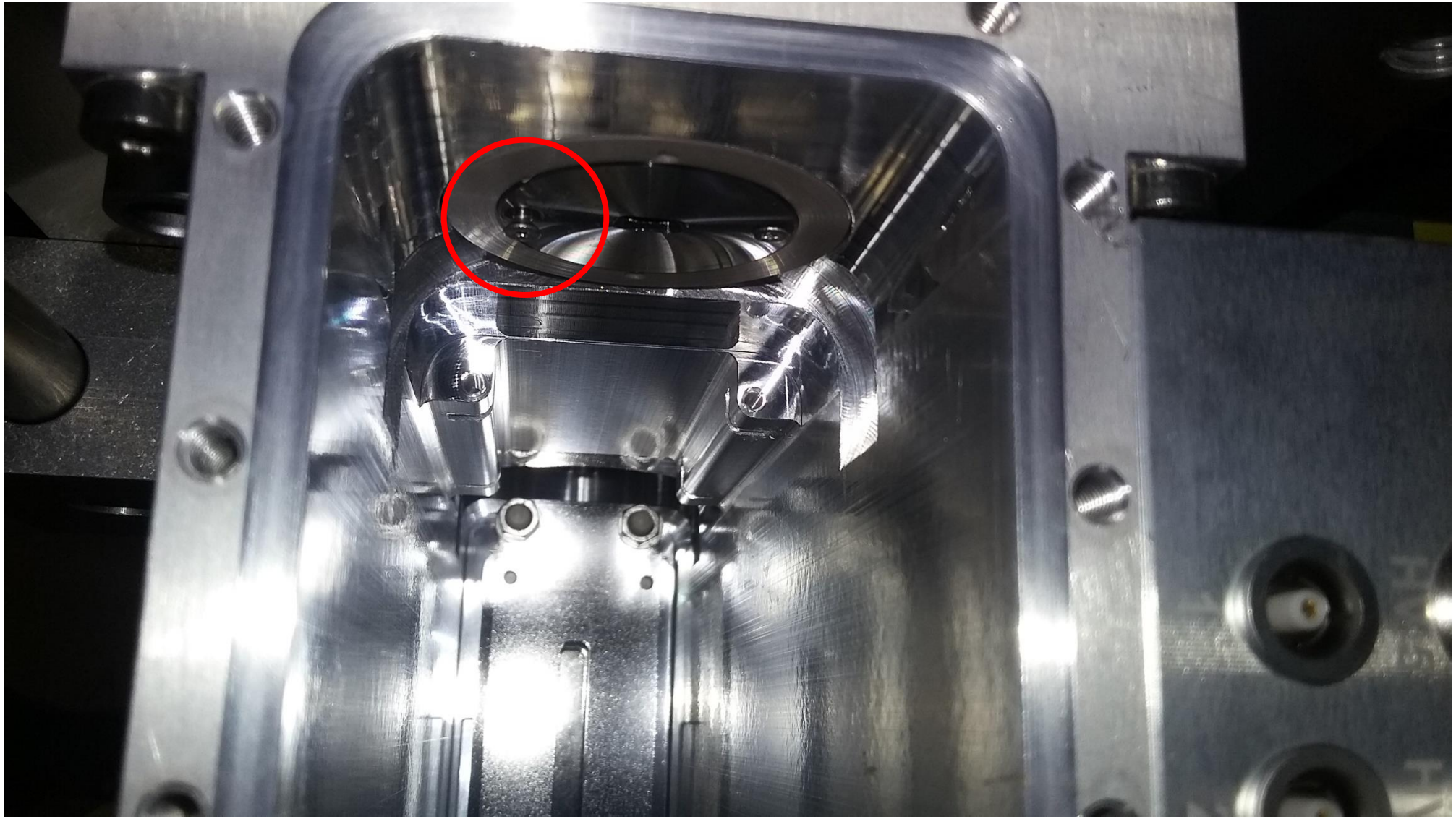

TOF-ACSM Interlock is tripped.
Ionizer pressure reads just over 5e-4 mbar.
Most likely this is zero drift on the gauge.
Use a small wire to hold down zero button for >5s

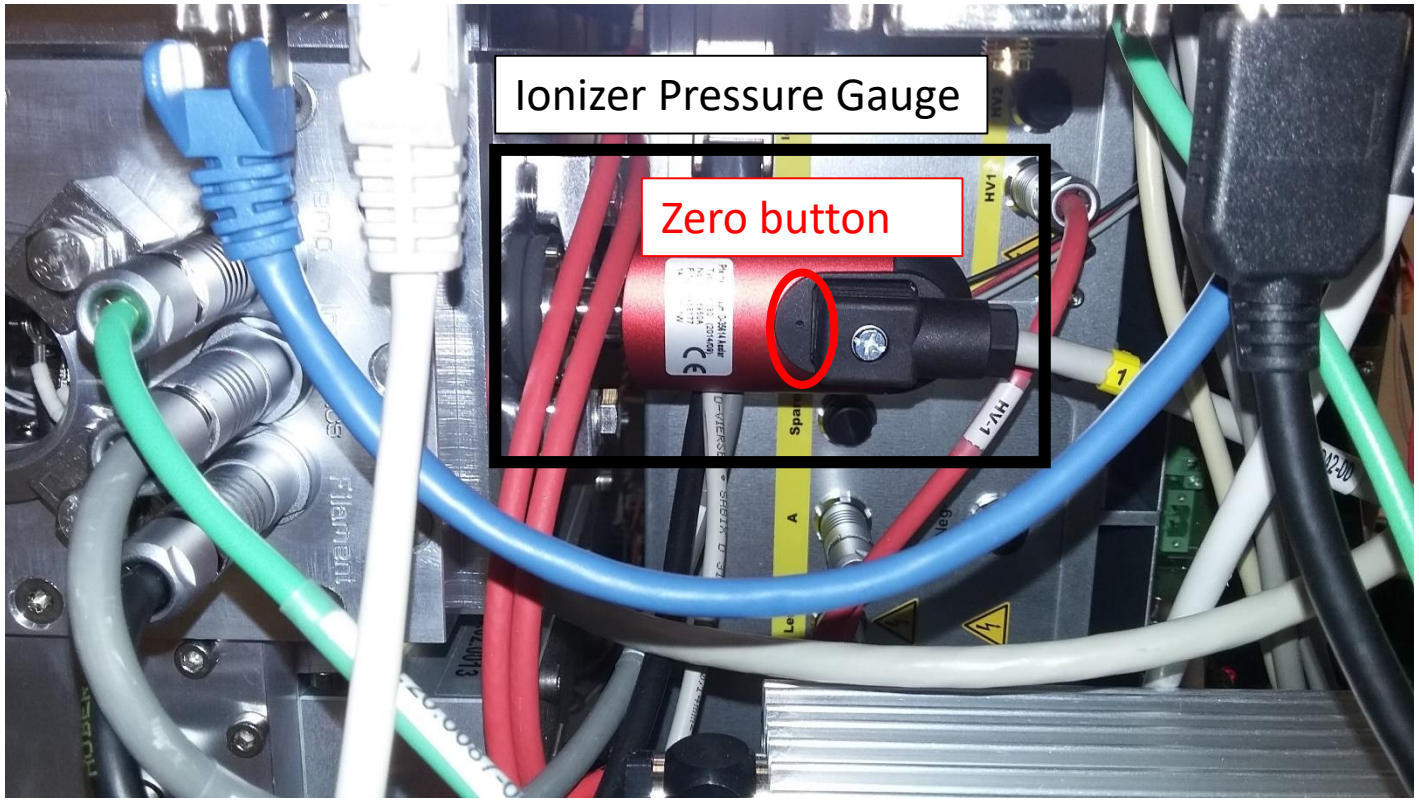

Adjusting the Gauge

The gauge is factory calibrated. Due to long time operation or contamination, a zero drift could occur. Periodically check the zero and adjust it if necessary.

For adjusting the zero, operate the gauge under the same ambient conditions and in the same mounting orientation as normally.

The gauge is adjusted to default values. However, it can also be adjusted to other pressure values, if the exact pressure value is known (reference measurement).

1. If you are using a seal with centering ring and filter, check that they are clean and replace them if necessary (→ "Deinstallation").

2. Activate the gauge and operate it at atmospheric pressure for at least 10 minutes.

3. Press the button with a pin (max. ø1.1 mm) and the ATM adjustment is carried out: The gauge is adjusted to 1000 mbar (8.50 VDC) by default. By pressing the button >5 s the pressure value is increased towards 1200 mbar (or, by pressing it again, decreased towards 500 mbar) until the button is released or the limit is reached.

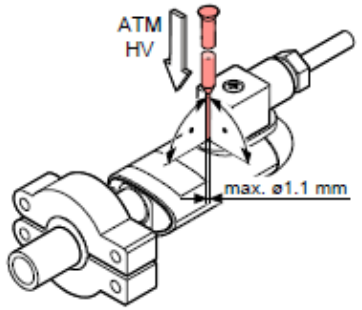

4. Evacuate to $p \ll 10^{-4}$ mbar (recommended) or to a pressure in the range of 10^{-4} … 10^{-2} mbar and wait at least 2 minutes.

5. Press the button with a pin and the HV adjustment is carried out: The gauge is adjusted to 1×10^{-4} mbar (1.50 VDC) by default. By pressing the button >5 s the pressure value is increased toward 1×10^{-2} mbar until the button is released or the limit is reached.

Can I use Pieber effect to clean my vaporizer?

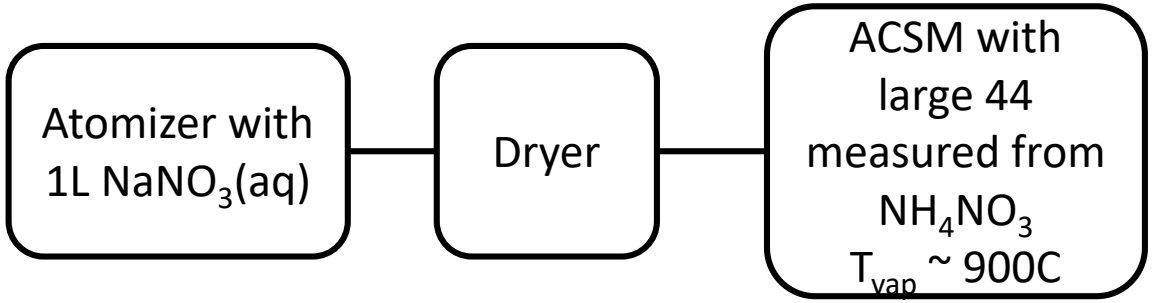

Set this up Friday night…

Can I use Pieber effect to clean my vaporizer?

Atomizer with 1L $NaNO_3$(aq) — Dryer — ACSM with large 44 measured from NH_4NO_3 T_{vap} ~ 900C

Come back Monday Morning…

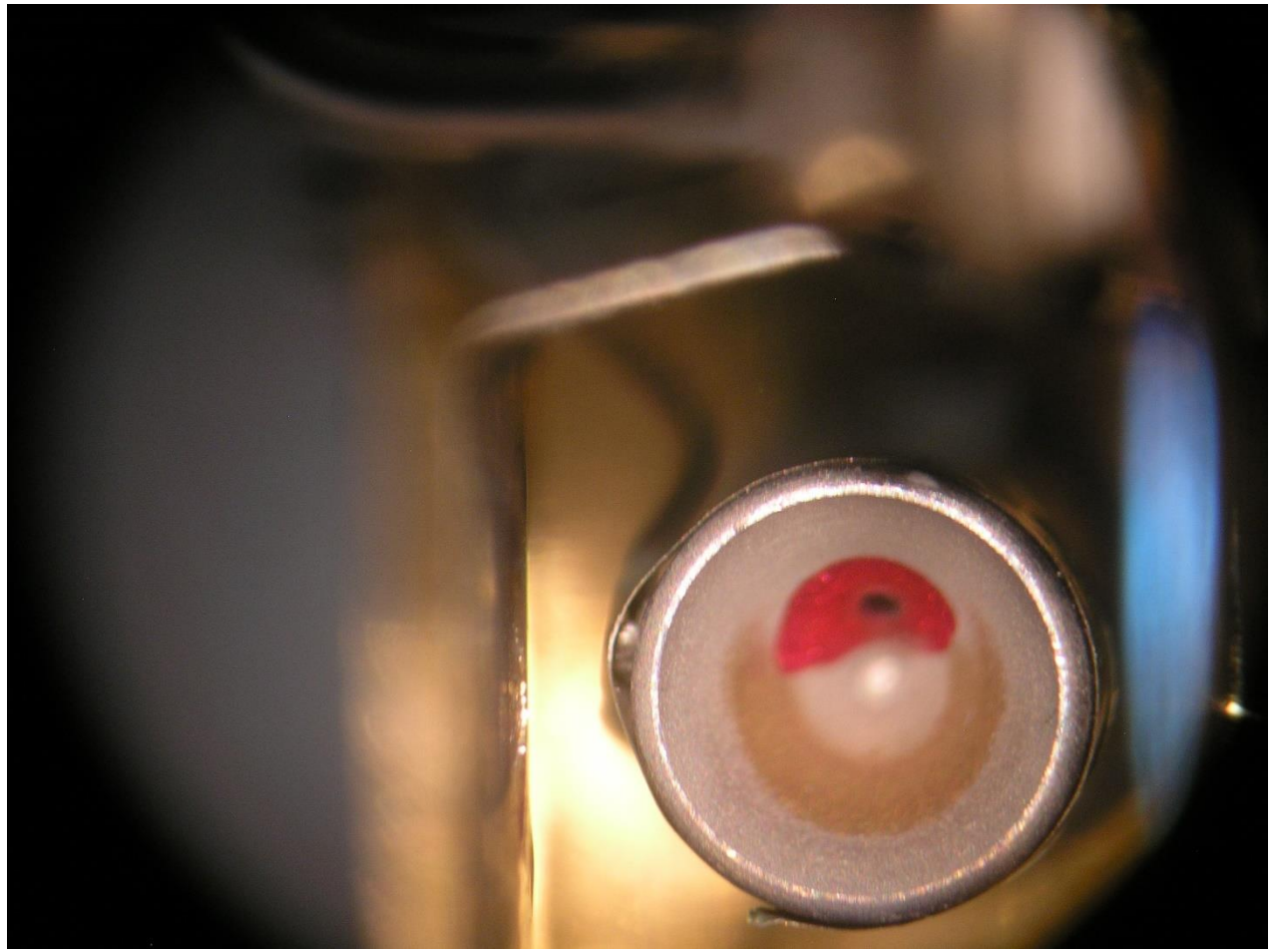

Can I use Pieber effect to clean my vaporizer?

Atomizer with 1L $NaNO_3$(aq) — Dryer — ACSM with large 44 measured from NH_4NO_3 T_{vap} ~ 900C

Don't do this.

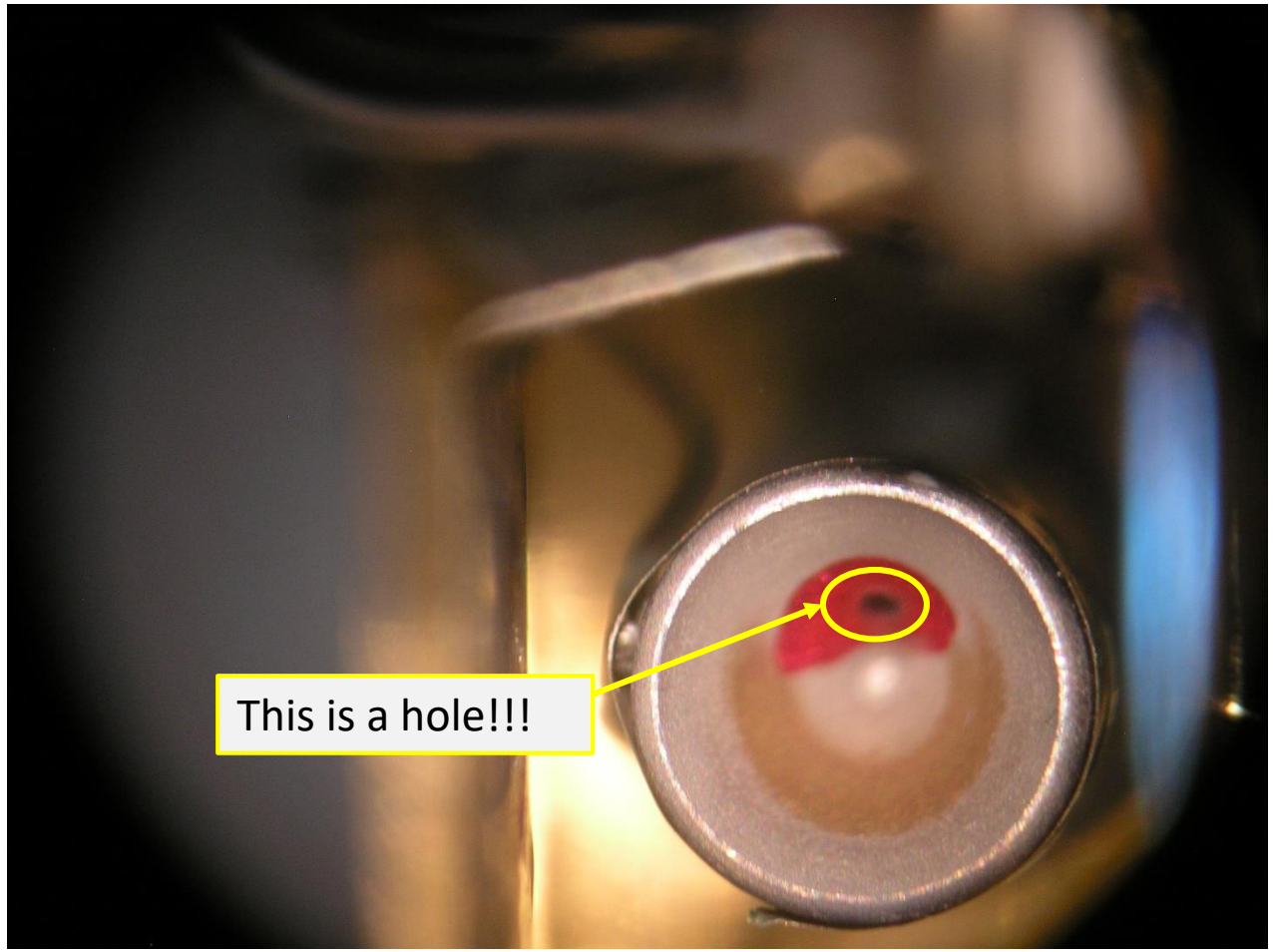

Thank you!

Any Questions?

Aerodyne Research Inc.